meister

2010/2011

AIR

H_2O

OIL

GAS

SPEC

START

Get into the flow!

Index

Ideogram

Medium / Ranges

Water & other liquids
0,2 - 250 l/min

Air & other gases
3 - 2750 Nl/min

Oil
0,5 - 110 l/min

Operating conditions

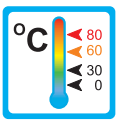

Operating temperature
black: standard
orange/red: option

Operating pressure
green: standard
yellow/orange: option

Viscosities
30 - 600 cSt

Orientation / Flow direction

Any orientation
Any flow direction

Orientation horizontal
Any flow direction

Orientation vertical
Flow direction bottom to top

Indication

Sight glass

Mechanical indication

LED / LCD

Combined indication

Switch contact

Normally open (SPST N.O.)

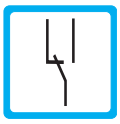

Change over (SPDT)

Nomally open or change over

Output signal

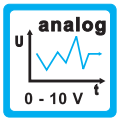

Analog output
Voltage: 0 - 10 V

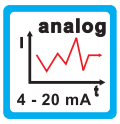

Analog output
Current: 4 - 20 mA

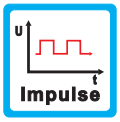

Pulse output

Standards

Explosion proof to ATEX

UL-certification

DWG

- wide measuring range
- sturdy construction
- burnt in scale

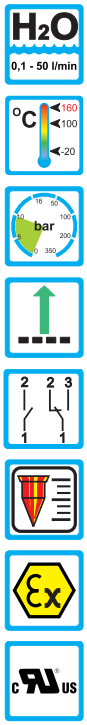

01

DUG

- wide measuring range
- sturdy construction
- any orientation

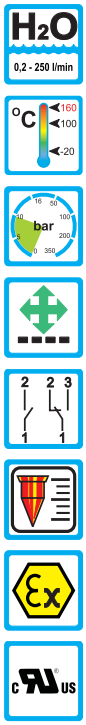

01

RVO/U-1
RVO/U-2
RVO/U-4

- burnt in scale
- sturdy construction
- any orientation

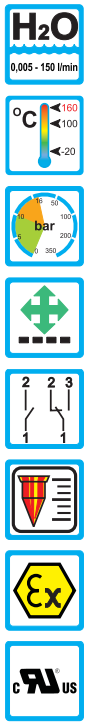

01

DWG-L

- wide measuring range
- sturdy construction
- burnt in scale

01

RVO/U-L1
RVO/U-L2
RVO/U-L4

- burnt in scale
- sturdy construction
- any orientation

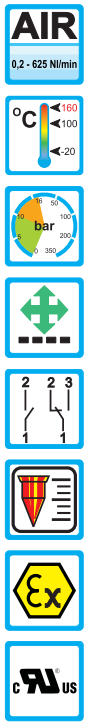

01

2100, 2150, 2300, 2340

- high accuracy
- simple installation
- low pressure drop

01

6001, 6002

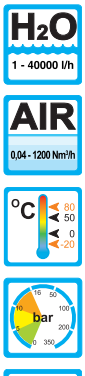

- high accuracy
- high chemical resistance
- low pressure drop

01

Flow Monitor Flow Indicator

DWG

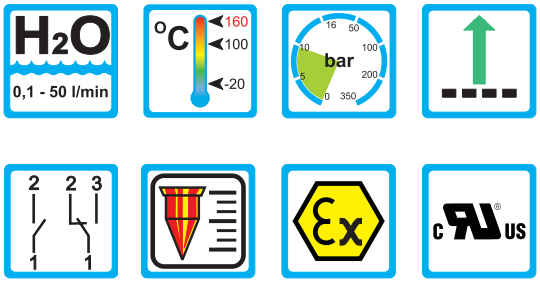

Range of Application

Operation

- Float measuring principle

Application

- Cooling systems and cooling circuits
- Medicine technology
- Pharma industry
- Chemical industry
- Research and development

Features

- High reliability
- High switch accuracy
- Wide switch range
- Infinitely variable switchpoint adjustment through user
- EX-version to ATEX available
- Scales are burned into the sightglass
- Threaded connection, special threads on request

Installation hints

- The operating instructions for DWG must be observed!
- Download: www.meister-flow.com

Operating Data

Operating pressure max.	10 bar
Pressure drop	0,01 - 0,2 bar
Maximum temperature	100 °C (optional 160 °C)
Accuracy	±5 % of full scale

Measuring Ranges

Type	Switch range for H_2O at 20°C (1)		
	[l/min]	[gph]	[gpm]
DWG-1,5	0,1 - 1,5	1,6 - 23,8	
DWG-3	0,2 - 3	3,2 - 47,5	
DWG-8	0,3 - 8	5,0 - 127,0	
DWG-12	1 - 12	16,0 - 190,0	
DWG-18	2 - 18	32,0 - 285,0	
DWG-35	3 - 35	48,0 - 550,0	
DWG-50	4 - 50	60,0 - 790,0	

(1) the specified data are switch-off points
other switch ranges on request.

DWG 0003 06-09 E M

Technical Data

Mechanical drawing

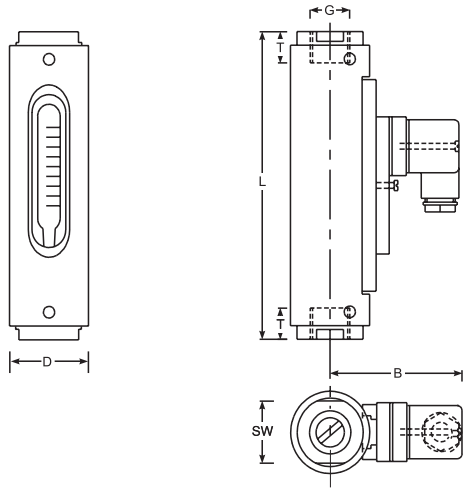

Connection diagram

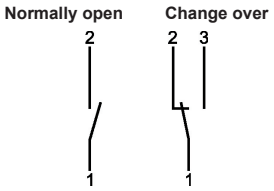

Summary of types

Type:	Overall dimensions [mm]							Weight approx. [g]
	SW	D	B	G	DN	T	L	
DWG-1,5	32	43	73	1/4"	8	14	132	625
DWG-3				3/8"	10	14	135	
DWG-8				1/2"	15	15	135	
DWG-12								
DWG-18	32	43	73	1/2"	15	15	163	650
				3/4"	20	16	167	
DWG-35	41	50	76	3/4"	20	18	164	850
DWG-50				1"	25	19	184	1000

Electrical Data

Change over	250V • 1,5A • 50VA [2]
Normally open	250V • 3A • 100VA
ATEX II 2 G Ex mb II T6 & ATEX II 2 D Ex tD A21 IP67 T80 °C	
ATEX II 2 G Ex mb II T5 & ATEX II 2 D Ex tD A21 IP67 T100 °C	
Change over	250V • 1A • 30VA
Normally open	250V • 2A • 60VA
Change over M 12x1 (-20 °C - 85 °C)	250V • 1,5A • 50VA [2]
Normally open M 12x1 (-20 °C - 85 °C)	250V • 3A • 100VA
Change over SPS	250V • 1A • 60VA

Ingress Protection:

IP65: plug connection DIN 43650 Form A

IP67: 1 m sealed in cable, (with EEx-version 2 m)
or plug connection M 12x1

Output signal

The contact opens / changes when the flow decreases below the set point..

Power supply

Not required (potentialfree reed contacts)

Plug types

Other plug types or cable lengths on request

[2] Minimum load 3 VA

Material

Brass version

Wetted parts:

Float:	Brass nickel-plated
Sightglass:	Duran® 50
Gaskets:	NBR (optional FKM, EPDM) [3]

All other wetted parts: Brass nickel-plated

Not wetted Parts:

Housing:	Aluminium anodized

Stainless steel version

Wetted parts:

Float:	1.4571
Sightglass:	Duran® 50
Gaskets:	FKM (optional NBR, EPDM) [3]

All other wetted parts: 1.4571

Not wetted Parts:

Housing:	Aluminium anodized

[3] Other gasket materials on request

DWG 2 0011 06-09 E M

meister strömungstechnik gmbh
Im Gewerbegebiet 2
63831 Wiesen
Germany
Tel.: +49 (0) 6096 / 97 20 - 0
Fax: +49 (0) 6096 / 97 20 - 30
E-Mail: vertrieb@meister-flow.com
Internet: www.meister-flow.com

Flow monitor Flow indicator

DUG

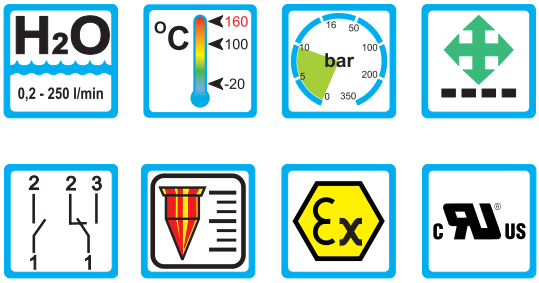

Range of Applications

Operation

- Float measuring principle

Application

- Mechanical Engineering e.g. Weldingmachinery, Laserplants
- Medicine technology
- Pharma industry
- Chemical industry
- Research and development

Features

- Universal orientation
- High switch accuracy
- Wide switch range
- Infinitely variable switchpoint adjustment through user
- EX-version to ATEXavailable
- Scales are burned into to the sightglass
- Threaded connection, Special threads on request

Installation hints

- The operating instructions for DUG must be observed!
- Download: www.meister-flow.com

Operating Data

Operating pressure max.	10 bar
Pressure drop	0,02 to 0,8 bar
Maximum temperature	100 °C (optional 160 °C)
Accuracy	±5 % of full scale

Measuring Ranges

Type	Switch range for H_2O at 20 °C (1)		
	[l/min]	[gph]	[gpm]
DUG-4	0,2 - 4	3,0 - 63,0	
DUG-6	0,5 - 6	8,0 - 95,0	
DUG-8	0,5 - 8	8,0 - 127,0	
DUG-14	0,5 - 14	8,0 - 222,0	
DUG-22	2 - 22	32,0 - 350,0	
DUG-28	1 - 28	16,0 - 444,0	
DUG-45	1 - 45	15,0 - 710,0	
DUG-80	2 - 80		0,5 - 21,0
DUG-90	6 - 90		1,6 - 23,8
DUG-110	6 - 110		1,6 - 29,0
DUG-150	15 - 150		4,0 - 39,5
DUG-220	30 - 220		8,0 - 58,0
DUG-250	35 - 250		9,0 - 66,0

(1) The specified data are switch-off points, other switch ranges on request.

DUG 0002 06-09 E M

Technical Data

Mechanical drawing

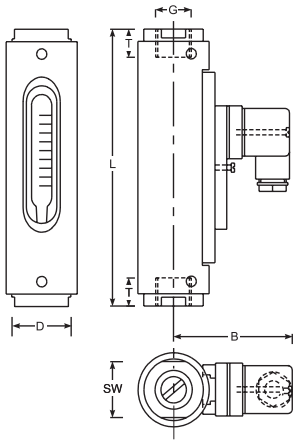

Connection diagram

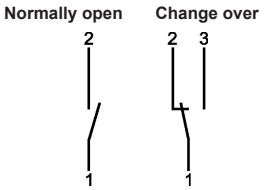

Summary of types

Type:	Overall dimensions [mm] SW	D	B	G	DN	T	L	Weight approx. [g]
DUG-4	32	43	73	1/4"	8	14	132	625
DUG-6				3/8"	10	14	132	
DUG-8				1/2"	15	15	135	
DUG-14								
DUG-22	32	43	73	1/2"	15	15	135	650
DUG-28								
DUG-45	32	43	73	3/4"	20	18	167	850
DUG-80	41	50	76	3/4"	20	18	164	1000
DUG-90				1"	25	19	184	
DUG-110	41	50	76	1"	25	19	184	1000
DUG-150	50	55	79	1 1/4"	32	21	216	1300
DUG-220	55	60	81	1 1/4"	32	21	210	1700
DUG-250	50	55	79	1 1/4"	32	21	222	1400

Electrical Data

Change over	250V • 1,5A • 50VA [2]
Normally open	250V • 3A • 100VA
ATEX II 2 G Ex mb II T6 & ATEX II 2 D Ex tD A21 IP67 T80 °C	
ATEX II 2 G Ex mb II T5 & ATEX II 2 D Ex tD A21 IP67 T100 °C	
Change over	250V • 1A • 30VA
Normally open	250V • 2A • 60VA
Change over M 12x1 (-20 °C - 85 °C)	250V • 1,5A • 50VA [2]
Normally open M 12x1 (-20 °C - 85 °C)	250V • 3A • 100VA
Change over SPS	250V • 1A • 60VA

Ingress Protection:

IP65: plug connection DIN 43650 Form A

IP67: 1 m sealed in cable, (with EEx-version 2 m)
or Plug connection M 12x1

Output signal

The contact opens / changes when the flow falls below the set point.

Power supply

Not required (potentialfree reed contacts)

Plug types

Other plug types oder cable lengths on request

[2] Minimum load 3 VA

Material

Brass version

Wetted parts:

Spring:	1.4571
Gaskets:	NBR (optional FKM, EPDM) [3]
Sight glass:	Duran® 50
All other wetted parts:	Brass nickel-plated

Non wetted parts:

Housing:	Aluminium anodized

Stainless steel version

Wetted parts:

Spring:	1.4571
Gaskets:	FKM (optional NBR,EPDM) [3]
Sight glass:	Duran® 50
All other wetted parts:	1.4571

Non wetted parts:

Housing:	Aluminium anodized

[3] Other gasket materials on request

DUM 2 0012 06-09 E M

meister strömungstechnik gmbh
Im Gewerbegebiet 2
63831 Wiesen
Germany
Tel.: +49 (0) 6096 / 97 20 - 0
Fax: +49 (0) 6096 / 97 20 - 30
E-Mail: vertrieb@meister-flow.com
Internet: www.meister-flow.com

Flow Monitor Flow Indicator

RVO/U-1

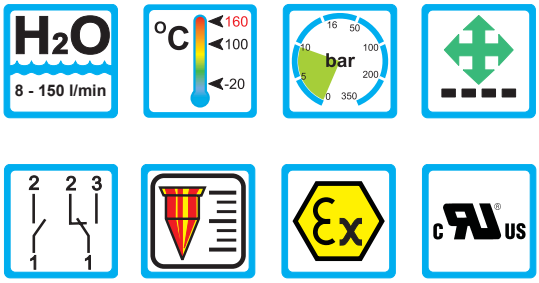

Range of Application

Operation

- Float measuring principle

Application

- Mechanical engineering
- Medicine technology
- Pharma industry
- Chemical industry
- Research and development
- Cooling systems and cooling circuits

Features

- Universal orientation
- High switch accuracy
- Infinitely variable switchpoint adjustment through user
- EX-version to ATEX available
- Threaded connection, special threads on request

Installation hints

- The operating instructions for RVO/U must be observed!
- Download: www.meister-flow.com

Operating Data

Operating pressure max.	10 bar
Pressure drop	0,02 - 0,4 bar
Maximum temperature	100 °C (optional 160 °C)
Accuracy	±10 % of full scale

Measuring Ranges

Type	Flow ranges for H_2O at 20 °C [1]		
	[l/min]	[gph]	[gpm]
RVO/U-1/30	8 - 30		2,1 - 8,0
RVO/U-1/45	15 - 45		4,0 - 12,0
RVO/U-1/90	30 - 90		8,0 - 24,0
RVO/U-1/150	60 - 150		16,0 - 40,0

[1] The specified data are switch-off points, other switch ranges on request.

RVO/U-1 1 0003 06-09 E M

Technical Data

Mechanical drawing

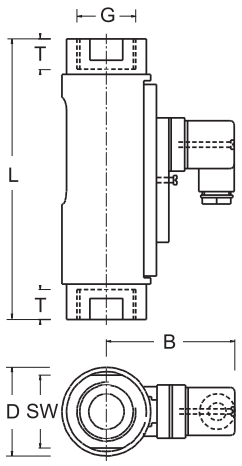

Connection diagram

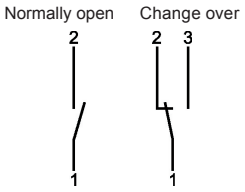

Summary of types

Type:	Overall dimensions [mm]							Weight (approx.) [g]
	SW	D	B	G	DN	T	L	
RVO/U-1/30	41	50	77	3/4"	20	18	139	800
RVO/U-1/45				1"	25		158	900
RVO/U-1/90								
RVO/U-1/150	41	50	77	1"	25	18	158	900

Electrical Data

Change over	250V • 1,5A • 50VA [2]
Normally open	250V • 3A • 100VA
ATEX II 2 G Ex mb II T6 & ATEX II 2 D Ex tD A21 IP67 T80 °C	
ATEX II 2 G Ex mb II T5 & ATEX II 2 D Ex tD A21 IP67 T100 °C	
Change over	250V • 1A • 30VA
Normally open	250V • 2A • 60VA
Change over M 12x1 (-20 °C - 85 °C)	250V • 1,5A • 50VA [2]
Normally open M 12x1 (-20 °C - 85 °C)	250V • 3A • 100VA
Change over SPS	250V • 1A • 60VA

Ingress Protection:

IP65: plug connection DIN 43650 Form A

IP67: 1 m sealed in cable, (with EEx-version 2 m) or plug connection M 12x1

Output Signal

The contact opens / changes when the flow decreases below the set point.

Power supply

Not required (potentialfree reed contacts)

Plug types

Other plug types or cable lengths on request

[2] Minimum load 3 VA

Material

Brass version

Wetted parts:

Sight glass:	Duran® 50
Spring:	1.4571
Gaskets:	NBR (optional FKM, EPDM) [3]
Magnets:	Hard ferrite
All other wetted parts	Brass nickel-plated

Non wetted parts:

Housing:	Aluminium anodized

Stainless steel version

Wetted parts:

Sight glass:	Duran® 50
Spring:	1.4571
Gaskets:	FKM (optional NBR,EPDM) [3]
Magnets:	Hard ferrite
All other wetted parts	1.4571

Non wetted parts:

Housing:	Aluminium anodized

[3] Other gasket materials on request

RVO/U-1 2 0011 06-09 E M

meister strömungstechnik gmbh
Im Gewerbegebiet 2
63831 Wiesen
Germany
Tel.: +49 (0) 6096 / 97 20 - 0
Fax: +49 (0) 6096 / 97 20 - 30
E-Mail: vertrieb@meister-flow.com
Internet: www.meister-flow.com

Flow Monitor Flow Indicator

RVO/U-2

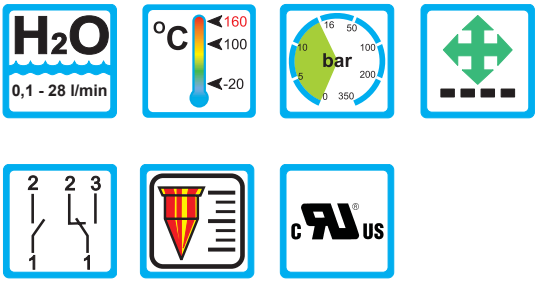

Range of Application

Operation

- Float measuring principle

Application

- Mechanical engineering
- Medicine technology
- Pharma industry
- Chemical industry
- Research and development
- Cooling systems and cooling circuits

Features

- Universal orientation
- High switch accuracy
- Infinitely variable switchpoint adjustment through user
- Threaded connection, special threads on request

Installation hints

- The operating instruction for RVO/U must be observed!
- Download: www.meister-flow.com

Operating Data

Operating pressure max.	16 bar
Pressure drop	0,02 - 0,3 bar
Maximum temperature	100 °C (optional 160 °C)
Accuracy	±10 % of full scale

Measuring Ranges

Type	Flow ranges for H_2O at 20 °C [1]		
	[l/min]	[gph]	[gpm]
RVO/U-2/05	0,1 - 0,5	1,6 - 8,0	
RVO/U-2/1	0,2 - 1	3,2 - 16,0	
RVO/U-2/2	0,4 - 1,6		0,1 - 0,4
RVO/U-2/4	1 - 4		0,25 - 1,0
RVO/U-2/8	2 - 8		0,55 - 2,0
RVO/U-2/15	4 - 15		1,1 - 4,0
RVO/U-2/20	5 - 22		1,5 - 5,5
RVO/U-2/28	6 - 28		1,5 - 7,5

[1] The specified data are switch-off points other switch ranges on request.

RVO/U-2 1 0003 06-09 E M

Technical Data

Mechanical drawing

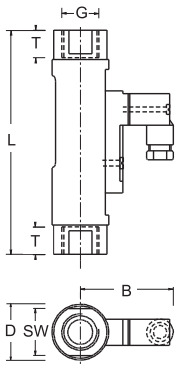

Connection diagram

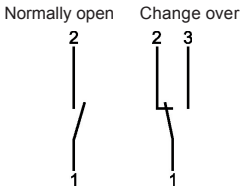

Summary of types

Type:	Overall dimensions [mm]							Weight (approx.) [g]
	SW	D	B	G	DN	T	L	
RVO/U-2/05								
RVO/U-2/1								
RVO/U-2/2								
RVO/U-2/4	27	32	53	1/2"	15	14	114	300
RVO/U-2/8								
RVO/U-2/15								
RVO/U-2/20								
RVO/U-2/28								

Electrical Data

Change over (3)	250V • 1,5A • 50VA (2)
Normally open	230V • 3A • 60VA
Change over M 12x1 (-20 °C - 85 °C)	125V • 1,5A • 50VA (2)
Normally open M 12x1 (-20 °C - 85 °C)	125V • 3A • 60VA
Change over SPS (3)	250V • 1A • 60VA

Ingress Protection:

IP65: plug connection DIN 43650 Form C or plug connection M 12x1

IP67: 1 m sealed in cable

Output Signal

The contact opens / changes when the flow decreases below the set point.

Power supply

Not required (potentialfree reed contacts)

Plug types

Other plug types or cable lengths on request

(2) Minimum load 3 VA

(3) Only with plug connection

Material

Brass version

Wetted parts:

Sight glass:	Duran® 50
Spring:	1.4571
Gaskets:	NBR (optional FKM, EPDM) (4)
Magnets:	Hard ferrite
All other wetted parts:	Brass nickel-plated

Non Wetted parts:

Housing:	Aluminium anodized

Stainless steel version

Wetted parts:

Sight glass:	Duran® 50
Spring:	1.4571
Gaskets:	FKM (optional NBR,EPDM) (4)
Magnets:	Hard ferrite
All other wetted parts:	1.4571

Non Wetted parts:

Housing:	Aluminium anodized

(4) Other gasket materials on request

RVO/U-2 2 0011 06-09 E M

meister strömungstechnik gmbh
Im Gewerbegebiet 2
63831 Wiesen
Germany
Tel.: +49 (0) 6096 / 97 20 - 0
Fax: +49 (0) 6096 / 97 20 - 30
E-Mail: vertrieb@meister-flow.com
Internet: www.meister-flow.com

Flow Monitor Flow Indicator

RVO/U-4

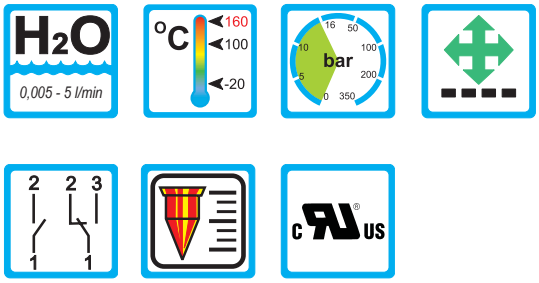

Range of Application

Operation

- Float measuring principle

Application

- Mechanical engineering
- Medicine technology
- Pharma industry
- Chemical industry
- Research and development
- Cooling systems and cooling circuits

Features

- Universal orientation
- High switch accuracy
- Infinitely variable switchpoint adjustment through user
- Threaded connection, special threads on request

Installation hints

- The operating instructions for RVO/U must be observed!
- Download: www.meister-flow.com

Operating Data

Operating pressure max.	16 bar
Pressure drop	0,02 - 0,2 bar
Maximum temperature	100 °C (optional 160 °C)
Accuracy	±10 % of full scale

Measuring Ranges

Type	Flow ranges for H_2O at 20 °C [1]		
	[l/min]	[gph]	[gpm]
RVO/U-4/01	0,005 - 0,06	0,08 - 0,95	
RVO/U-4/02	0,025 - 0,13	0,4 - 2,0	
RVO/U-4/03	0,06 - 0,3	1,0 - 4,8	
RVO/U-4/06	0,1 - 0,6	1,6 - 9,5	
RVO/U-4/1	0,2 - 1,2	3,0 - 19,0	
RVO/U-4/2	0,4 - 2		0,1 - 0,5
RVO/U-4/3	0,5 - 3		0,13 - 0,8
RVO/U-4/5	1 - 5		0,25 - 1,3

[1] The specified data are switch-off points, other switch ranges on request.

RVO/U-4 1 0003 06-09 E M

Technical Data

Mechanical drawing

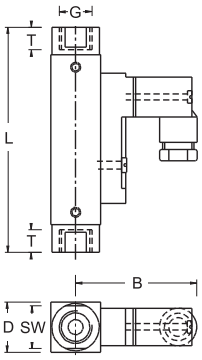

Connection diagram

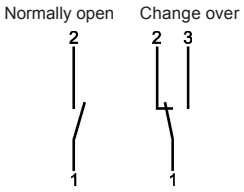

Summary of types

Typ:e	Overall dimensions [mm]							Weight (approx.) [g]
	SW	D	B	G	DN	T	L	
RVO/U-4/01								
RVO/U-4/02								
RVO/U-4/06								
RVO/U-4/1	17	20	49	1/4"	8	10	90	140
RVO/U-4/2								
RVO/U-4/3								
RVO/U-4/5								

Electrical Data

Change over [2]	200V • 1A • 20VA
Normally open	200V • 1A • 20VA
Change over M 12x1 (-20 °C - 85 °C)	125V • 1A • 20VA
Normally open M 12x1 (-20 °C - 85 °C)	125V • 1A • 20VA

Ingress Protection:

IP65: plug connection DIN 43650 Form C or plug connection M 12x1

IP67: 1 m sealed in cable

Output Signal

The contact opens / changes when the flow decreases below the set point.

Power supply

Not required (potentialfree reed contacts)

Plug types

Other plug types or cable lengths on request

[2] Only with plug connection

Material

Brass version

Wetted parts:

Sight glass:	Duran® 50
Spring:	1.4571
Gaskets:	NBR (optional FKM, EPDM) [3]
Magnets:	Hard ferrite
All other wetted parts	Brass nickel-plated

Non wetted parts:

Housing:	Aluminium anodized

Stainless steel version

Wetted parts:

Sight glass:	Duran® 50
Spring:	1.4571
Gaskets:	FKM (optional NBR,EPDM) [3]
Magnets:	Hard ferrite
All other wetted parts	1.4571

Non Wetted parts:

Housing:	Aluminium anodized

[3] Other gasket materials on request

RVO/U-4 2 0011 06-09 E M

meister strömungstechnik gmbh
Im Gewerbegebiet 2
63831 Wiesen
Germany
Tel.: +49 (0) 6096 / 97 20 - 0
Fax: +49 (0) 6096 / 97 20 - 30
E-Mail: vertrieb@meister-flow.com
Internet: www.meister-flow.com

Flow Monitor Flow Indicator

DWG-L

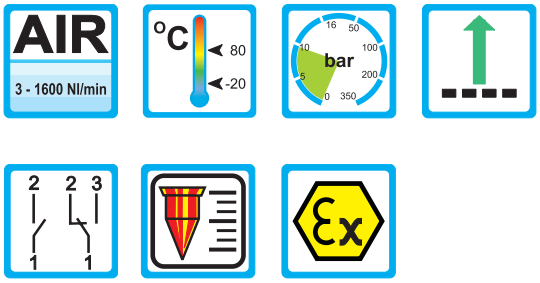

Range of Application

Operation

- Float measuring principle

Application

- Mechanical engineering
- Medicine technology
- Pharma industry
- Chemical industry
- Research and development

Charakteristika

- High reliability
- High switch accuracy
- Wide switch range
- Infinitely variable switchpoint adjustment through user
- EX-version to ATEX available
- Scales are burned into the sightglass
- Threaded connections, special threads on request

Installation hints

- The operating instructions for DWG-L must be observed!
- Download: www.meister-flow.com

Operating Data

Operating pressure max.	10 bar
Pressure drop	0,01 - 0,2 bar
Maximum temperature	80 °C
Accuracy	±10 % of full scale

Measuring Ranges

Type	Switch range Air at 1 bar abs. and 20 °C (1)		
	[Nl/min]	[SCFH]	[SCFM]
DWG-L1,5	3 - 30	6,5 - 63,5	
DWG-L3	6 - 60	13,0 - 127,0	
DWG-L8	6 - 160	13,0 - 340,0	
DWG-L12	20 - 220	42,0 - 465,0	
DWG-L18	40 - 360	85,0 - 760,0	
DWG-L35	60 - 700		2,1 - 24,7
DWG-L50	60 - 825		2,0 - 29,0
DWG-L100	200 - 1600		7,0 - 56,5

(1) The specified data are switch-off points, other switch ranges on request.

DWG-L 1 0002 06-09 E M

Technical Data

Mechanical drawing

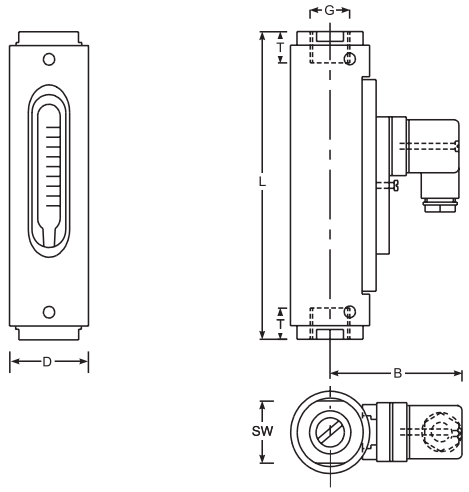

Connection diagram

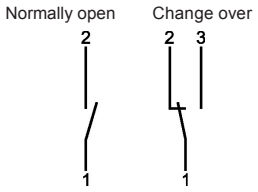

Summary of types

Type:	Overall dimensions [mm]							Weight approx. [g]
	SW	D	B	G	DN	T	L	
DWG-L1,5	32	43	73	1/4"	8	14	132	625
DWG-L3				3/8"	10	14	135	
DWG-L8				1/2"	15	15	135	
DWG-L12								
DWG-L18	32	43	73	1/2"	15	15	163	650
				3/4"	20	16	167	
DWG-L35	41	50	76	3/4"	20	18	164	850
DWG-L50				1"	25	19	184	1000
DWG-L100	41	50	76	1"	25	19	204	1100

Electrical Data

Change over	250V • 1,5A • 50VA [2]
Normally open	250V • 3A • 100VA
ATEX II 2 G Ex mb II T6 & ATEX II 2 D Ex tD A21 IP67 T80 °C	
ATEX II 2 G Ex mb II T5 & ATEX II 2 D Ex tD A21 IP67 T100 °C	
Change over	250V • 1A • 30VA
Normally open	250V • 2A • 60VA
Change over M 12x1 (-20 °C - 85 °C)	250V • 1,5A • 50VA [2]
Normally open M 12x1 (-20 °C - 85 °C)	250V • 3A • 100VA
Change over SPS	250V • 1A • 60VA

Ingress Protection:

IP65: plug connection DIN 43650 Form A

IP67: 1 m sealed in cable, (with EEx-version 2 m)
or plug connection M 12x1

Output signal

The contact opens / changes when the flow decreases below the set point.

Power supply

Not required (potentialfree reed contacts)

Plug types

Other plug types or cable lengths on request

[2] Minimum load 3 VA

Material

Brass version

Wetted parts:

Float:	POM
Sightglass:	Duran® 50
Gaskets:	NBR (optional FKM, EPDM) [3]

All other wetted parts: Brass nickel-plated

Not wetted Parts:

Housing:	Aluminium anodized

Stainless steel version

Wetted parts:

Float:	POM
Sightglass:	Duran® 50
Gaskets:	FKM (optional NBR, EPDM) [3]

All other wetted parts: 1.4571

Not wetted Parts:

Housing:	Aluminium anodized

[3] Other gasket materials on request

DWG-L 2 0009 06-09 E M

meister strömungstechnik gmbh
Im Gewerbegebiet 2
63831 Wiesen
Germany
Tel.: +49 (0) 6096 / 97 20 - 0
Fax: +49 (0) 6096 / 97 20 - 30
E-Mail: vertrieb@meister-flow.com
Internet: www.meister-flow.com

Flow Monitor Flow Indicator

RVO/U-L1

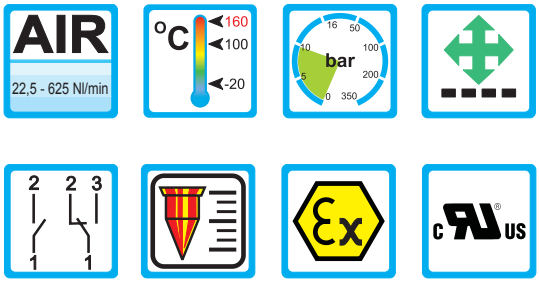

Range of Application

Operation

- Float measuring principle

Application

- Mechanical engineering
- Medicine technology
- Pharma industry
- Chemical industry
- Research and development
- Cooling systems and cooling circuits

Features

- Universal orientation
- High reliability
- High switch accuracy
- Infinitely variable switchpoint adjustment through user
- EX-version to ATEX available
- Scales are burned into the sight glass
- Threaded connection, special threads on request

Installation hints

- The operating instruction for RVO/U-L must be observed!
- Download: www.meister-flow.com

Operating Data

Operating pressure max.	10 bar
Pressure drop	0,02 - 0,4 bar
Maximum temperature	100 °C (optional 160 °C)
Accuracy	±10 % of full scale

Measuring Ranges

Type	Switch range Air at 1 bar abs. and 20 °C [1]		
	[Nl/min]	[SCFH]	[SCFM]
RVO/U-L10080	22,5 - 80	48,0 - 170,0	
RVO/U-L10130	50 - 130	105,0 - 275,0	
RVO/U-L10420	130 - 420		4,6 - 14,8
RVO/U-L10625	200 - 625		7,0 - 22,0

[1] The specified data are switch-off points, other switch ranges on request.

RVO/U-L 1 1 0002 06-09 E M

Technical Data

Mechanical drawing

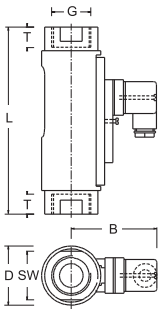

Connection diagram

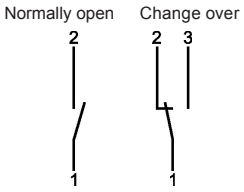

Summary of types

Type:	Overall dimensions [mm] SW	D	B	G	DN	T	L	Weight (approx.) [g]
RVO/U-L10080	41	50	77	3/4"	20	18	139	800
RVO/U-L10130								
RVO/U-L10420				1"	25		158	900
RVO/U-L10625								

Electrical Data

Change over	250V • 1,5A • 50VA [2]
Normally open	250V • 3A • 100VA
ATEX II 2 G Ex mb II T6 & ATEX II 2 D Ex tD A21 IP67 T80 °C	
ATEX II 2 G Ex mb II T5 & ATEX II 2 D Ex tD A21 IP67 T100 °C	
Change over	250V • 1A • 30VA
Normally open	250V • 2A • 60VA
Change over M 12x1 (-20 °C - 85 °C)	250V • 1,5A • 50VA [2]
Normally open M 12x1 (-20 °C - 85 °C)	250V • 3A • 100VA
Change over SPS	250V • 1A • 60VA

Ingress Protection:

IP65: plug connection DIN 43650 Form A

IP67: 1 m sealed in cable, (with EEx-version 2 m)
or plug connection M 12x1

Output Signal

The contact opens / changes when the flow decreases below the set point.

Power supply

Not required (potentialfree reed contacts)

Plug types

Other plug types or cable lengths on request

[2] Minimum load 3 VA

Material

Brass version

Wetted parts:

Sight glass:	Duran® 50
Spring:	1.4571
Gaskets:	NBR (optional FKM, EPDM) [3]
Magnets:	Hard ferrite
All other wetted parts	Brass nickel-plated

Non wetted parts:

Housing:	Aluminium anodized

Stainless steel version

Wetted parts:

Sight glass:	Duran® 50
Spring:	1.4571
Gaskets:	FKM (optional NBR,EPDM) [3]
Magnets:	Hard ferrite
All other wetted parts	1.4571

Non wetted parts:

Housing:	Aluminium anodized

[3] Other gasket materials on request

RVO/U-L 1 2 0010 06-09 E M

meister strömungstechnik gmbh
Im Gewerbegebiet 2
63831 Wiesen
Germany
Tel.: +49 (0) 6096 / 97 20 - 0
Fax: +49 (0) 6096 / 97 20 - 30
E-Mail: vertrieb@meister-flow.com
Internet: www.meister-flow.com

Flow Monitor Flow Indicator

RVO/U-L2

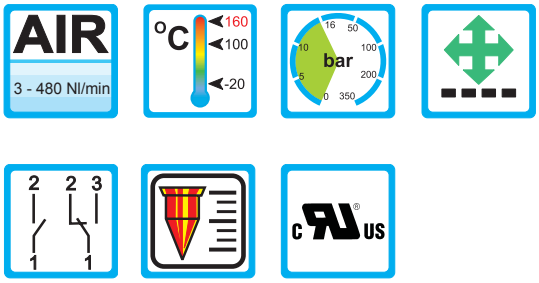

Range of Application

Operation

- Float measuring principle

Application

- Mechanical engineering
- Medicine technology
- Pharma industry
- Chemical industry
- Research and development
- Cooling systems and cooling circuits

Features

- Universal orientation
- High reliability
- High switch accuracy
- Infinitely variable switchpoint adjustment through user
- Scales are burned into the sight glass
- Threaded connection, special threads on request

Installation hints

- The operating instructions for RVO/U-L must be observed!
- Download: www.meister-flow.com

Operating Data

Operating pressure max.	16 bar
Pressure drop	0,02 - 0,3 bar
Maximum temperature	100 °C (optional 160 °C)
Accuracy	±10 % of full scale

Measuring Ranges

Type	Switch range for Air at 1 bar abs. and 20 °C (1)		
	[Nl/min]	[SCFH]	[SCFM]
RVO/U-L20012	3 - 12	6,5 - 25,0	
RVO/U-L20030	7 - 30	15,0 - 64,0	
RVO/U-L20040	12 - 40	25,0 - 85,0	
RVO/U-L20125	28 - 125		1,0 - 4,4
RVO/U-L20200	50 - 200		1,8 - 7,0
RVO/U-2/15L	100 - 420		3,5 - 14,8
RVO/U-2/20L	120 - 480		4,2 - 17,0

(1) The specified data are switch-off points.
other switch ranges on request.

RVO/U-L 2 1 0002 06-09 E M

Technical Data

Mechanical drawing

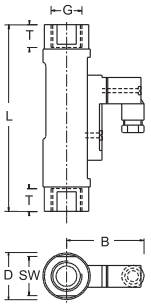

Connection diagram

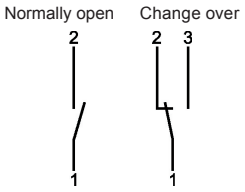

Summary of types

Type:	Overall dimensions [mm]							Weight (approx.) [g]
	SW	D	B	G	DN	T	L	
RVO/U-L20012								
RVO/U-L20030								
RVO/U-L20040								
RVO/U-L20125	27	32	53	1/2"	15	14	114	300
RVO/U-L20200								
RVO/U-2/15L								
RVO/U-2/20L								

Electrical Data

Change over [3]	250V • 1,5A • 50VA [2]
Normally open	230V • 3A • 60VA
Change over M 12x1 (-20 °C - 85 °C)	125V • 1,5A • 50VA [2]
Normally open M 12x1 (-20 °C - 85 °C)	125V • 3A • 60VA
Change over SPS [3]	250V • 1A • 60VA

Ingress Protection:

IP65: plug connection DIN 43650 Form C or plug connection M 12x1

IP67: 1 m sealed in cable

Output Signal

The contact opens / changes when the flow decreases below the set point.

Power supply

Not required (potentialfree reed contacts)

Plug types

Other plug types or cable lengths on request

[2] Minimum load 3 VA

[3] Only with plug connection

Material

Brass version

Wetted parts:

Sight glass:	Duran® 50
Spring:	1.4571
Gaskets:	NBR (optional FKM, EPDM) [4]
Magnets:	Hard ferrite
All other wetted parts	Brass nickel-plated

Non wetted parts:

Housing:	Aluminium anodized

Stainless steel version

Wetted parts:

Sight glass:	Duran® 50
Spring:	1.4571
Gaskets:	FKM (optional NBR,EPDM) [4]
Magnets:	Hard ferrite
All other wetted parts	1.4571

Non wetted parts:

Housing:	Aluminium anodized

[4] Other gasket materials on request

RVO/U-L 2 2 0010 06-09 E M

meister strömungstechnik gmbh
Im Gewerbegebiet 2
63831 Wiesen
Germany
Tel.: +49 (0) 6096 / 97 20 - 0
Fax: +49 (0) 6096 / 97 20 - 30
E-Mail: vertrieb@meister-flow.com
Internet: www.meister-flow.com

Flow Monitor Flow Indicator

RVO/U-L4

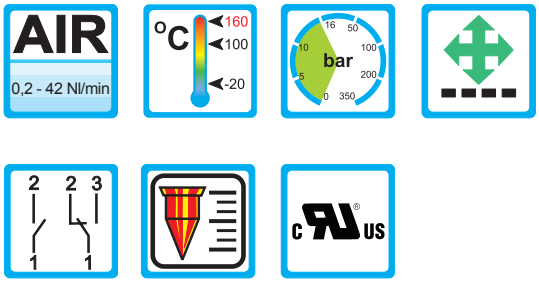

Range of Application

Operation

- Float measuring principle

Application

- Mechanical engineering
- Medicine technology
- Pharma industry
- Chemical industry
- Research and development
- Cooling systems and cooling circuits

Features

- Universal orientation
- High reliability
- High switch accuracy
- Infinitely variable switchpoint adjustment through user
- Scales are burned into the sight glass
- Threaded connection, special threads on request

Installation hints

- The operating instructions for RVO/U-L must be observed!
- Download: www.meister-flow.com

Operating Data

Operating pressure max.	16 bar
Pressure drop	0,02 - 0,2 bar
Maximum temperature	100 °C (optional 160 °C)
Accuracy	±10 % of full scale

Measuring Ranges

Type	Switch range for Air at 1 bar abs. and 20 °C [1]		
	[Nl/min]	[SCFH]	[SCFM]
RVO/U-L40001	0,2 - 1,3	0,4 - 2,75	
RVO/U-L40002	0,5 - 2	1,05 - 4,25	
RVO/U-L40003	0,8 - 3	1,70 - 6,40	
RVO/U-L40005	1,5 - 5	3,5 - 10,5	
RVO/U-L40008	2 - 8	4,5 - 17,0	
RVO/U-L40012	3 - 12	6,5 - 25,0	
RVO/U-L40014	3,5 - 14	7,5 - 29,5	
RVO/U-L40020	5,5 - 20	12,0 - 42,0	
RVO/U-L40024	7 - 24	15,0 - 50,0	
RVO/U-L40035	10 - 35	21,0 - 74,0	
RVO/U-L40042	10 - 42	21,0 - 89,0	

[1] The specified data are switch-off points, other switch ranges on request.

RVO/U-L 4 1 0002 06-09 E M

Technical Data

Mechanical drawing

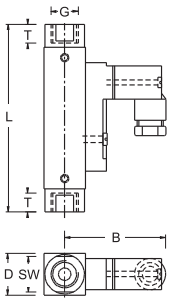

Electrical Data

Change over (2)	200V • 1A • 20VA
Normally open	200V • 1A • 20VA
Change over M 12x1 (-20 °C - 85 °C)	125V • 1A • 20VA
Normally open M 12x1 (-20 °C - 85 °C)	125V • 1A • 20VA

Ingress Protection:

IP65: plug connection DIN 43650 Form C or plug connection M 12x1

IP67: 1 m sealed in cable

Output Signal

The contact opens / changes when the flow decreases below the set point.

Power supply

Not required (potentialfree reed contacts)

Plug types

Other plug types or cable lengths on request

(2) Only with plug connection

Connection diagram

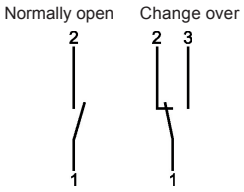

Summary of types

Type:	Overall dimensions [mm]							Weight (approx.) [g]
	SW	D	B	G	DN	T	L	
RVO/U-L40001	17	20	49	1/4"	8	10	90	140
RVO/U-L40002								
RVO/U-L40003								
RVO/U-L40005								
RVO/U-L40012								
RVO/U-L40014								
RVO/U-L40020								
RVO/U-L40024								
RVO/U-L40035								
RVO/U-L40042								

Material

Brass version

Wetted parts:

Sight glass:	Duran® 50
Spring:	1.4571
Gaskets:	NBR (optional FKM, EPDM) (3)
Magnets:	Hard ferrite
All other wetted parts	Brass nickel-plated

Non wetted parts:

Housing:	Aluminium anodized

Stainless steel version

Wetted parts:

Sight glass:	Duran® 50
Spring:	1.4571
Gaskets:	FKM (optional NBR,EPDM) (3)
Magnets:	Hard ferrite
All other wetted parts	1.4571

Non wetted parts:

Housing:	Aluminium anodized

(3) Other gasket materials on request

RVO/U-L 4 2 0010 06-09 E M

meister strömungstechnik gmbh
Im Gewerbegebiet 2
63831 Wiesen
Germany
Tel.: +49 (0) 6096 / 97 20 - 0
Fax: +49 (0) 6096 / 97 20 - 30
E-Mail: vertrieb@meister-flow.com
Internet: www.meister-flow.com

Flow monitor

2100, 2150
2300, 2340

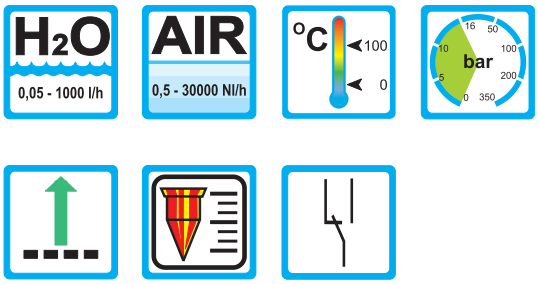

Range of Applications

Operation
- Float measuring principle

Application
- Control panels
- Pilot plants
- Water treatment
- Chemical industry
- Medical industry
- Cosmetic industry
- Heat treatment

Features
- Easy installation
- Small size
- No flow straightening section necessary
- Horizontal ports
- Low pressure drop
- Options:
  Adjustable limit switches, constant flow regulation
  (with differential pressure controller RCA and RCD)

Installation hints
- The operating instruction for types series 2000 must be observed!
- Download: www.meister-flow.com

Operating Data

	2100	2150	2300	2340
Operating pressure max.	PN 15			
Pressure drop	see table page 3 and 4			
Ambient temperature	0 - 80 °C			
Media temperature	0 - 100 °C			
Accuracy classified VDE / VDI 3513	± 3,5 %	± 3,0 %	± 1,6 %	± 1,6 %

Measuring Ranges

Type	Flow ranges (water at 20 °C) [l/h]		[l/h]
C110/0001	0,1 - 1	C212/0025	2,5 - 25
C110/0002,5	0,2 - 2,5	C213/0040	4 - 40
C111/0005	0,5 - 5	C214/0060	6 - 60
C111/0010	1 - 10	C215/0100	10 - 100
C111/0016	1,6 - 16	C311/0025	2,5 - 25
C112/0025	2,5 - 25	C311/0040	4 - 40
C113/0040	4 - 40	C311/0060	6 - 60
C114/0060	6 - 60	C312/0100	10 - 100
C115/0100	10 - 100	C312/0160	16 - 160
C210/0001	0,1 - 1	C312/0250	25 - 250
C210/0002,5	0,2 - 2,5	C313/0400	40 - 400
C211/0005	0,5 - 5	C313/0630	60 - 630
C211/0010	1 - 10	C313/1000	100 - 1000
C211/0016	1,6 - 16		

2000 1 0004 05-09 E M

Technical data

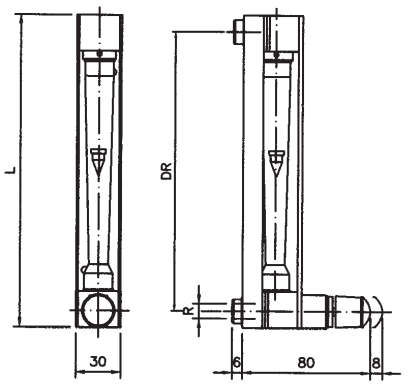

Type 2100, 2150, 2300

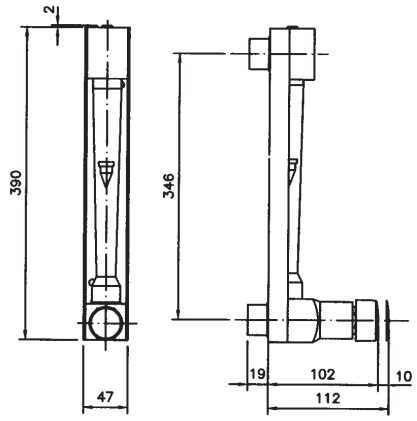

Type 2340

Type overview

Type	DR	L	Connection (female thread) Size	Type of thread
2100	136	158	1/4"	BSP/NPT
2150	186	208	1/4"	BSP/NPT
2300	336	358	1/4"	BSP/NPT
2340	346	390	1/2"	BSP/NPT

Weight

Type	Weight [kg] flowmeter	Weight [kg] flow regulator
2100	0,70	2,5
2150	0,85	2,5
2300	0,85	2,5
2340	1,80	3,0

Combination with flow regulator (optional)

Type	flow water [l/h] min.	flow water [l/h] max.	flow air [Nl/h] min.	flow air [Nl/h] max.
2100				
2150	1	250	10	4000
2300				
2340	60	400	700	7000

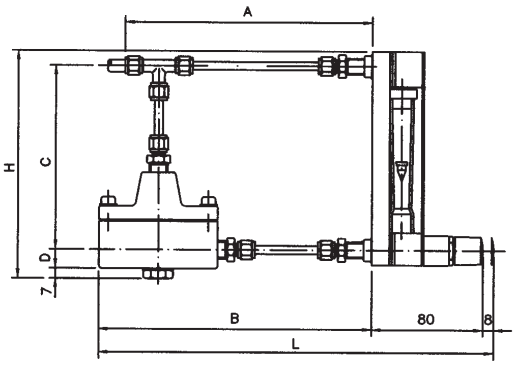

Dimensions (flowmeter and flow regulator)

Type	Dimensions A	B	C	H	L	Connections D
2100	150	170	136	172	266	1/4" BSP/NPT
2150	150	170	186	222	266	1/4" BSP/NPT
2300	150	170	336	372	266	1/4" / 1/2" BSP/NPT
2340	180	200	346	397	320	1/2" BSP/NPT

Dimensions (flow regulator)

Type	R	A	B	C	D	E	F
RCA RCD	1/4" BSP/NPT	35	11	52	13	88	63
RA40 RD40	1/2" BSP/NPT	40	16	65	18	100	81

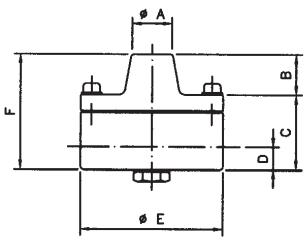

2000 2 0005 05-09 E M

Material

Flow monitor

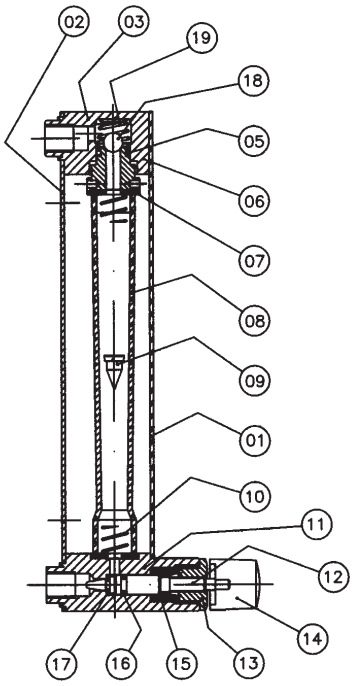

Constant flow regulator

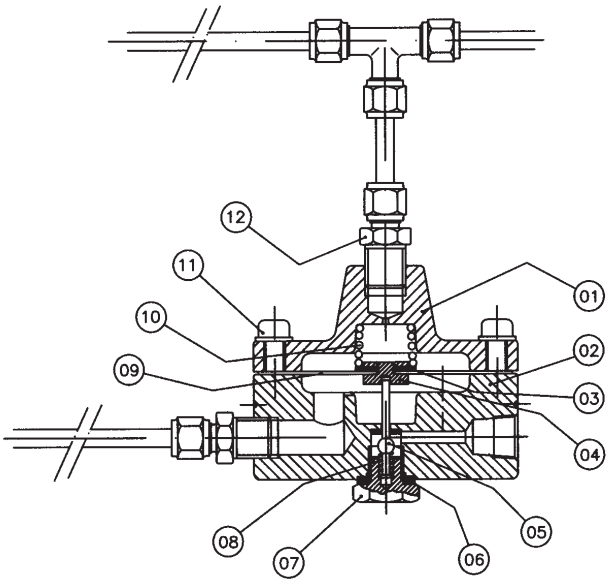

Material flow monitor

No.	Description	Marterial
1	Protection Shield *	Polycarbonate
2	Body	Stainless steel 1.4401
3	End piece	Stainless steel 1.4401
5	O - Ring	NBR / Viton® / EPDM
6	Piston	Stainless steel 1.4401
7	Gaskets	NBR / Viton® / EPDM
8	Measuring tube	Borosilicate Glass
9	Float	Stainless steel 1.4404 Glass / Aluminium Plastic
10	Spring	Stainless steel 1.4401
11	Valve body	Stainless steel 1.4404
12	Valve stem	Stainless steel 1.4404
13	Guide Nut	Stainless steel 1.4404
14	Adjusting knob	Plastic
15	Valve guide	PTFE
16	O - Ring	NBR / Viton® / EPDM
17	Valve seat	PTFE
18	Option	Stainless steel 1.4401
19	Option	Stainless steel 1.4401

* not available for the type 2340

Material constant flow regulator

No.	Description	Marterial
1	Diaphragm body	Stainless steel 1.4404
2	Valve body	Stainless steel 1.4404
3	Diaphragm	NBR / Viton® / PTFE
4	Valve guide	Stainless steel 1.4404
5	Regulating valve	Stainless steel 1.4404
6	Gasket	PTFE
7	Stop for spring	Stainless steel 1.4404
8	Valve spring	Stainless steel 1.4401
9	Diaphragm plate	Stainless steel 1.4401
10	Diaphragm spring	Stainless steel 1.4401
11	Screw	Stainless steel 1.4401
12	Connectors	Stainless steel 1.4401

2000 3 0004 05-09 E M

Measuring ranges

Measuring ranges*

Tube No.	Tube length [mm]	Water 20 °C [l/h] Stainless Steel	Water 20 °C [l/h] Glass
Type 2100			
C110/0001	100	0,1 – 1	0,05 – 0,5
C110/0002,5	100	0,2 – 2,5	0,1 – 1
C111/0005	100	0,5 – 5	0,2 – 2
C111/0010	100	1 – 10	0,4 – 4
C111/0016	100	1,6 – 16	0,6 – 6
C112/0025	100	2,5 – 25	1 – 10
C113/0040	100	4 – 40	1,6 – 16
C114/0060	100	6 – 60	2 – 20
C115/0100	100	10 – 100	4 – 40
Type 2150			
C210/0001	150	0,1 – 1	0,05 – 0,5
C210/0002,5	150	0,2 – 2,5	0,1 – 1
C211/0005	150	0,5 – 5	0,2 – 2
C211/0010	150	1 – 10	0,4 – 4
C211/0016	150	1,6 – 16	0,6 – 6
C212/0025	150	2,5 – 25	1 – 10
C213/0040	150	4 – 40	1,6 – 16
C214/0060	150	6 – 60	2 – 20
C215/0100	150	10 – 100	4 – 40

Measuring ranges*

Tube No.	Air 20 °C, 1013 mbar abs. [Nl/h] Stainless Steel	Air 20 °C, 1013 mbar abs. [Nl/h] Glass	Air 20 °C, 1013 mbar abs. [Nl/h] Plastic
Type 2100			
C110/0001	3 – 30	1 – 15	0,5 – 5
C110/0002,5	8 – 80	4 – 40	1,5 – 16
C111/0005	15 – 160	7 – 70	3 – 30
C111/0010	30 – 350	15 – 180	8 – 110
C111/0016	40 – 450	20 – 240	10 – 140
C112/0025	80 – 800	40 – 400	20 – 250
C113/0040	120 – 1200	70 – 700	40 – 400
C114/0060	200 – 2000	100 – 1000	70 – 700
C115/0100	300 – 3500	150 – 1600	100 – 1100
Type 2150			
C210/0001	3 – 30	2 – 20	0,5 – 5
C210/0002,5	8 – 80	5 – 50	1 – 16
C211/0005	15 – 180	10 – 100	3 – 30
C211/0010	30 – 300	15 – 180	10 – 100
C211/0016	50 – 500	30 – 300	10 – 150
C212/0025	80 – 800	40 – 400	20 – 250
C213/0040	100 – 1000	70 – 700	40 – 400
C214/0060	150 – 1500	100 – 1000	70 – 700
C215/0100	300 – 3000	150 – 1500	100 – 1100

Pressure drop*

Tube No.	Pressure drop [mm H_2O] Stainless Steel	Pressure drop [mm H_2O] Glass	Pressure drop [mm H_2O] Plastic
Type 2100			
C110/0001			
C110/0002,5			
C111/0005	20	10	5
C111/0010			
C111/0016			
C112/0025			
C113/0040	35	20	10
C114/0060			
C115/0100	50	25	15
Type 2150			
C210/0001			
C210/0002,5			
C211/0005	20	10	5
C211/0010			
C211/0016			
C212/0025			
C213/0040	35	20	10
C214/0060			
C215/0100	50	25	15

*Measuring ranges for

float types ECG and AC

2000 4 0004 05-09 E M

Measuring ranges, pressure drop

Measuring ranges*

Tube No.	Tube length [mm]	Wasser 20 °C [l/h] Stainless Steel
Type 2300		
C311/0025	300	2,5 – 25
C311/0040	300	4 – 40
C311/0060	300	6 – 60
C312/0100	300	10 – 100
C312/0160	300	16 – 160
C312/0250	300	25 – 250
Type 2340		
C313/0400	300	40 – 400
C313/0630	300	60 – 630
C313/1000	300	100 – 1000

Measuring ranges*

Tube No.	Tube length [mm]	Air 20 °C, 1013 mbar abs. [Nl/h] Aluminium	Stainless Steel
Type 2300			
C311/0025	300	40 – 400	120 – 800
C311/0040	300	70 – 700	150 – 1400
C311/0060	300	100 – 1000	150 – 2000
C312/0100	300	170 – 1700	300 – 3000
C312/0160	300	250 – 2500	400 – 4500
C312/0250	300	400 – 4000	700 – 7000
Type 2340			
C313/0400	300	700 – 7000	1000 – 10000
C313/0630	300	1000 – 10000	1800 – 18000
C313/1000	300	1700 – 17000	3000 – 30000

*Measuring ranges for float type AC

Pressure drop

Tube No.	Pressure drop [mm H_2O] Aluminium	Stainless Steel
Type 2300		
C311/0025		
C311/0040	22	55
C311/0060		
C311/0100		
C311/0160	35	90
C311/0250		
Type 2340		
C313/0400		
C313/0400	50	125
C313/0400		

2000 5 0004 05-09 E M

Inductive contact 20-AMD and 24-AMD

The magnet inside the float triggers the inductive contact mounted in an aluminium case.
(Type SJ 3,5 n. NAMUR / DIN 19234)

- 1 or 2 adjustable limit switches
- Power supply: 8 V DC (from switch amplifier)
- Ambient temperature: -25 °C to +70 °C

Switch amplifier
Model NAMUR (Din 19234), for 1 or 2 inductive contacts
- Power supply: 24...230 V AC, 50 - 60 Hz
  24...250 V DC
- Input: intrinsically safe circuit EEx ia IIC
- Output: 1 or 2 relays
- Load: 2...5 A / 40 V DC
- Ambient temperature: -25 °C bis +70 °C

Dimensions

Type	A [mm]	Ø D [mm]	E [mm]	Max. flow Air [Nl/h]	Max. flow Water [l/h]
20 - AMD	37	15	25	300	10
24 - AMD	87	21	45	2000	60

Mechanical drawing

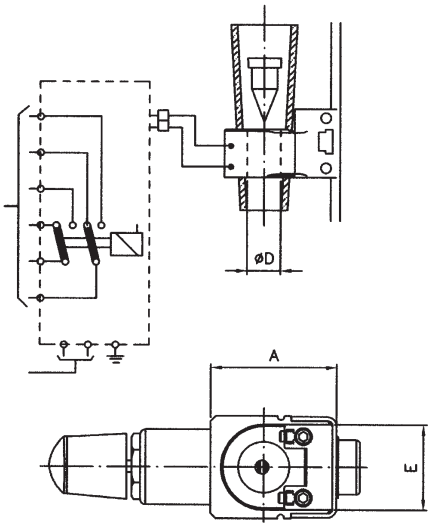

Variable optical contact, type 20-AMO*

The optical contact (infrared light) will be triggered by interruption of the lightbeam through the float. The sensor is mounted in a PVC support. The relay is in a seperate aluminium box. The cable between the control relay and the sensor is 2 m.

- 1 or 2 adjustable limit switches
- Load: 1 A @ 220 V AC / 50 Hz
- Hysteresis: ± 5 % from the full scale
- Ambient temperature: -10 °C bis +80 °C
- Power supply: 220 V AC / 50 Hz, 24 V DC

Dimensions

Type	A [mm]	B [mm]	C [mm]	Max. flow Air [Nl/h]	Max. flow Water [l/h]
20 - AMO	48	52	15	700	60

* Glass float not suitable!

Mechanical drawing

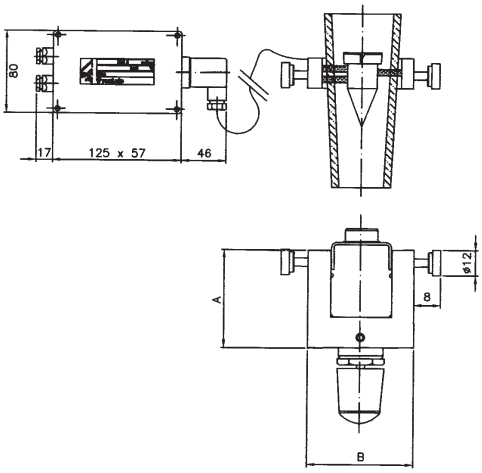

2000 6 0004 05-09 E M

Operation-principle of RCA

The construction of the series 2000 allows the use of the regulator types RCA or RCD. The regulator keeps the flow constant during appearing pressure changes. The RCA will be used for gases with variable input pressure and constant output pressure. The RCD will be used for gases with constant input pressure and variable output pressure.
For liquid media only the type RCA can be used.

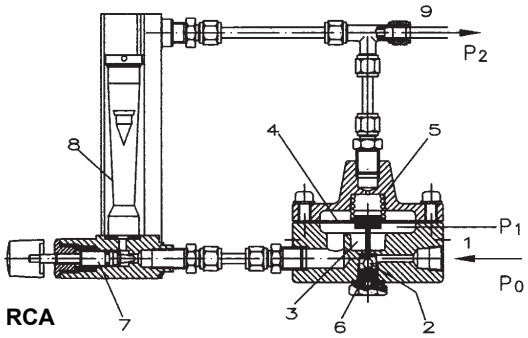

Operation-principle of RCA

The media streams with variable input pressure P_0 through the connector (1), via the regulating valve (2) into the regulation chamber (3) with low pressure P_1 on the diaphragm (4). The valve (2), which is connected with the diaphragm (4), will be held open by force of the spring (5). During the media flow through the control valve (7) and the measuring tube (8) to the outlet (9), exists a constant counter pressure P_2 on the diaphragm (4).
The springs (5;6) are so designed, that the valve (2) opens, when the input pressure P_0 drops and closes when the pressure P_0 rises, so the flow, which is adjusted at the control valve, will be constant.
The differential pressure between P_0 and P_2 must be larger than 200 mbar, for correct function of the RCA flow rate regulator and the springs (5;6) to be operational.

Flow diagrams

The flow curves show the relationship between input pressure P_0 and the counter pressure P_2 in an RCA-regulator. The different flow rates will be adjusted with the control valve (7) to the flow monitor. The counter pressure P_2 in the diagram represents in this case the atmospheric pressure. The flow is constant, when the pressure difference between the input P_0 and counter pressure P_2 is larger than 200 mbar.

RCA at small flow rates

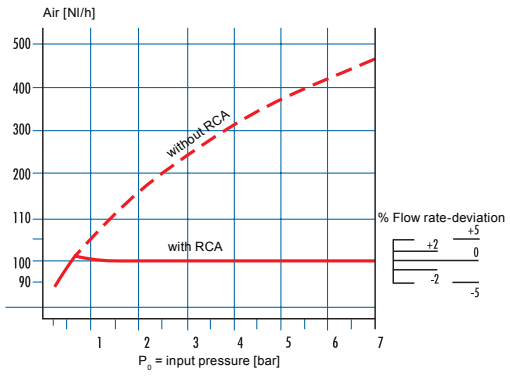

RCA at large flow rates

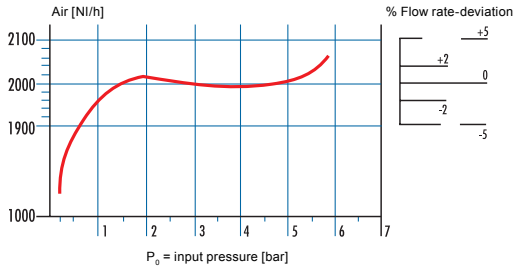

2000 7 0001 05-09 E M

Operation-principle of RCD

The construction of the series 2000 allows the use of the regulator types RCA or RCD. The regulator keeps the flow constant during appearing pressure changes. The RCA will be used for gases with variable input pressure and constant output pressure.
The RCD
will be used for gases with constant input pressure and variable output pressure.
For liquid media only the type RCA can be used.

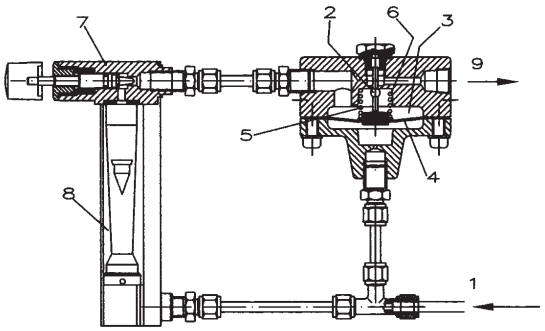

RCD

Operation-principle of RCD

The operation of the flow rate regulator (RCD) is reversed to the RCA. The change of the position of the valve (2) depends on the output pressure and the adjustment of the valve (7).

RCD at low flow rates

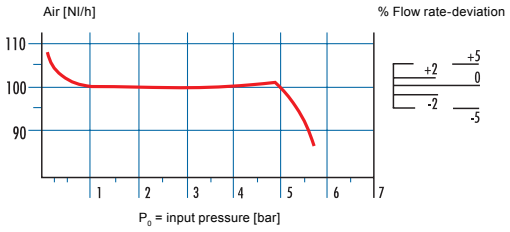

2000 8 0001 05-09 E M

meister strömungstechnik gmbh
Im Gewerbegebiet 2
63831 Wiesen
Germany
Tel.: +49 (0) 6096 / 97 20 - 0
Fax: +49 (0) 6096 / 97 20 - 30
E-Mail: vertrieb@meister-flow.com
Internet: www.meister-flow.com

Flowmeter

6001 / 6002

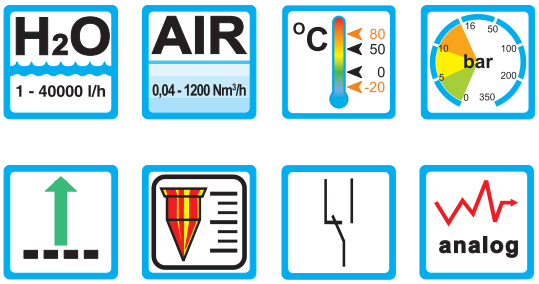

Range of applications

Operation

- Float measuring principle

Application

- Water treatment
- Chemical industry
- Laboratories
- Air-conditioning
- Cooling systems

Features

- Easy installation
- Low pressure drop
- Good chemical resistance
- Direct readable scale
- Threaded connection (6001) or flange-connection (6002)
- Options:

  adjustable limit switches, analog transmitter

Installation hints

- The operating instruction for type series 6000 must be observed!
- Download: www.meister-flow.com

Operating Data

Type	6001 6002	6001-SS 6002-SS	6001-PVC 6002-PVC	6001-PTFE 6002-PTFE
Operating temperature	-20 °C to +80 °C	-20 °C to +80 °C	0 °C to +50 °C	-20 °C to +80 °C
Operating pressure	PN 5 to PN 15 depending on type (see table on page 3)			
Pressure drop	see table on page 3			
Accuracy	classified 1,6 (VDI / VDE 3513)			
Connection	thread (6001), flange (6002)			

Measuring Ranges

Type	Flow ranges (water at 20 °C) [l/h]	Type	Flow ranges (water at 20 °C) [l/h]
C311-0025	2,5 - 25	C315-4000	400 - 4000
C311-0040	4 - 40	C315-6300	500 - 6300
C311-0060	6 - 60		
		C316-M010	1000 - 10000
C312-0100	10 - 100	C316-M014	2000 - 14000
C312-0160	16 - 160		
C312-0250	25 - 250	C317-M016	1600 - 16000
		C317-M020	2000 - 20000
C313-04001	40 - 400	C317-M030	3000 - 30000
C313-06301	60 - 630	C317-M040	6000 - 40000
C313-10001	100 - 1000		
		C30-00251	2,5 - 25
C314-1600	160 - 1600	C30-00401	4 - 40
C314-2500	250 - 2500		

6000 1 0004 05-09 E M

Dimensions, technical data, materials

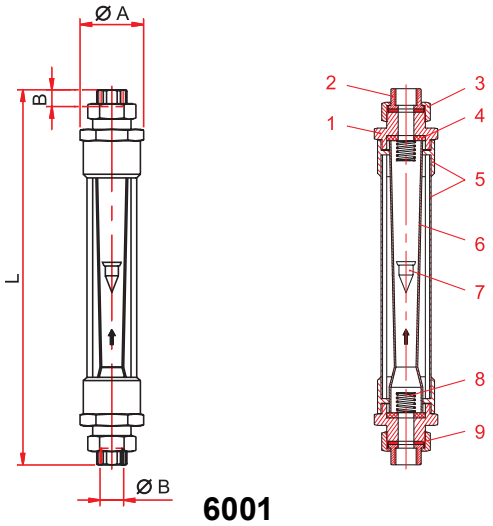

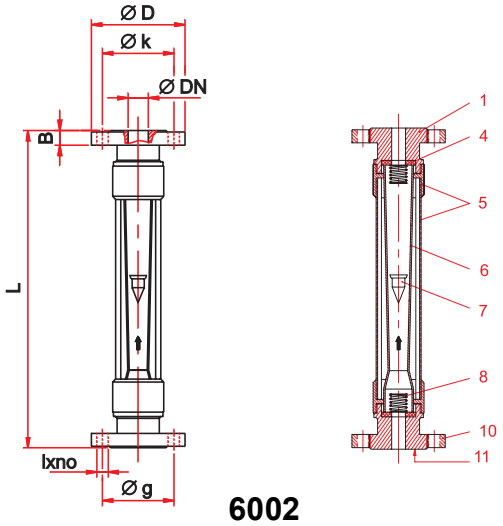

Dimensions and weights of Type 6001

R	DN	A	B	L	weight [kg]
1/2"	15	60	15	410	1,8
3/4"	20	60	15	415	2,2
1"	25	75	20	425	3,3
1 1/2"	40	105	20	445	5,9
2"	50	120	25	460	9,6
2 1/2"	65	150	25	505	12,5
3"	80	150	30	510	16,5

Dimensions and weights of Type 6002 (DIN 2501)

DN	D	k	g	B	lxno	L	weight [kg]
15	95	65	45	14	14x4	380	2,5
20	105	75	58	14	14x4	380	3,3
25	115	85	68	16	14x4	390	4,8
40	150	110	88	16	18x4	400	8
50	165	125	102	18	18x4	410	11
65	185	145	122	18	18x4	420	15,3
80	200	160	138	20	18x4	420	19,3

Materials

No.	Description	6001 6002	6001-SS 6002-SS
1	**End pieces**	Steel	SS 1.4404
2	**Connection**	Steel	SS 1.4404
3	**Nut**	Steel	Steel
4	**Gaskets**	NBR **	NBR**
5	**Body**	Steel, coated	Steel, coated *
6	**Measuring tube**	Borosilicate glass	Borosilicate glass
7	**Float**	1.4404, glass, alu.	1.4404, glass, alu.
8	**Spring**	1.4401	1.4404
9	**Gaskets**	NBR **	NBR **
10	**Flange**	Steel	Steel / 1.4404
11	**Flange face**	Steel	1.4404

* Stainless steel 1.4404 on request
** Other gasket materials on request

Materials

No.	Description	6001-PVC 6002-PVC	6001-PTFE 6002-PTFE
1	**End pieces**	PVC	Steel-PTFE / PTFE
2	**Connection**	PVC	PTFE
3	**Nut**	PVC	PTFE
4	**Gaskets**	NBR **	NBR **
5	**Body**	Steel, coated *	Steel, coated *
6	**Measuring tube**	Borosilicate glass	Borosilicate glass
7	**Float**	PVC	PTFE / PVDF
8	**Spring**	PVC	PTFE / PVDF
9	**Gaskets**	NBR **	NBR **
10	**Flange**	Steel / PVC	Steel / PTFE
11	**Flange face**	PVC	PTFE

* Stainless steel 1.4404 on request
** Other gasket materials on request

6000 2 0004 05-09 E M

Measuring ranges

Float type AC

Tube Type C Model-No.	Stainless Steel1.4404 7,95 g/cm³ Water 20 °C [l/h] min – max	Air *1 [Nm³/h] min – max	Aluminium 2,85 g/cm³ Air *1 [Nm³/h] min – max	Pressure [bar]
C311-0025	2,5 – 25	0,07 – 0,7	0,04 – 0,4	15
C311-0040	4 – 40	0,11 – 1,1	0,07 – 0,7	15
C311-0060	6 – 60	0,18 – 1,8	0,10 – 1	15
C312-0100	10 – 100	0,30 – 3	0,17 – 1,7	15
C312-0160	16 – 160	0,45 – 4,5	0,25 – 2,5	15
C312-0250	25 – 250	0,7 – 7	0,4 – 4	15
C313-04001	40 – 400	1,1 – 11	0,7 – 7	15
C313-06301	60 – 630	1,8 – 18	1 – 10	15
C313-10001	100 – 1000	3 – 30	1,7 – 17	15
C314-1600	160 – 1600	4,5 – 45	2,5 – 25	10
C314-2500	250 – 2500	7 – 70	4 – 40	10
C35-40001	400 – 4000	11 – 110	7 – 70	8
C35-63001	500 – 6300	18 – 180	10 – 100	8

Model 6001 and 6002

Tube Type C Model-No.	1.4404 Pressure drop for Water [mm H_2O]	Alum. Pressure drop for Water [mm H_2O]	Tube length (± 1mm) [mm]	R	DN
C311-0025	55	22	300	1/2" / 3/4"	15 / 20
C311-0040	55	22	300	1/2" / 3/4"	15 / 20
C311-0060	55	22	300	1/2" / 3/4"	15 / 20
C312-0100	90	35	300	1/2" / 3/4"	15 / 20
C312-0160	90	35	300	1/2" / 3/4"	15 / 20
C312-0250	90	35	300	1/2" / 3/4"	15 / 20
C313-04001	125	50	300	3/4" / 1"	20 / 25
C313-06301	125	50	300	3/4" / 1"	20 / 25
C313-10001	125	50	300	3/4" / 1"	20 / 25
C314-1600	175	75	300	1 1/2"	40
C314-2500	175	75	300	1 1/2"	40
C315-4000	230	95	300	1 1/2"	40
C315-6300	230	95	300	1 1/2"	40

Float type AC

Tube Type C Model-No.	Stainless Steel 1.4404 7,95 g/cm³ Water 20 °C [l/h] min – max	Air *1 [Nm³/h] min – max	Aluminium 2,85 g/cm³ Air *1 [Nm³/h] min – max	Pressure [bar] max
C316-M010	1000 – 10000	30 – 300	17 – 170	6
C316-M014	2000 – 14000	120 – 420	45 – 200	6
C317-M016	1600 – 16000	45 – 450	25 – 250	5
C317-M020	2000 – 20000	60 – 600	35 – 350	5
C317-M030	3000 – 30000	90 – 900	50 – 500	5
C317-M040	6000 – 40000	180 – 1200	100 – 712	5

*1 at 1,013 bar abs. and 20 °C

Model 6001 and 6002

Tube Type C Model-No.	1.4404 Pressure drop for Water [mm H_2O]	Alum. Pressure drop for Water [mm H_2O]	Tube length (± 1mm) [mm]	R	DN
C316-M010	300	125	300	2"	50
C316-M014	300	125	300	2"	50
C317-M016	400	170	300	2 1/2" / 3"	65 / 80
C317-M020	400	170	300	2 1/2" / 3"	65 / 80
C317-M030	400	170	300	2 1/2" / 3"	65 / 80
C317-M040	400	170	300	2 1/2" / 3"	65 / 80

*1 at 1,013 bar abs. and 20 °C

Float type AC / ECG

Tube Type C Model-No.	Stainless Steel 1.4404 7,95 g/cm³ Water 20 °C [l/h] min – max	Air *1 [Nl/h] min – max	Glass 2,6 g/cm³ Water 20 °C [l/h] min – max	Air *1 [Nl/h] min – max
C30-00251	2,5 – 25	70 – 700	1 – 10	40 – 400
C30-00401	4 – 40	120 – 1200	1,6 – 16	70 – 700

*1 at 1,013 bar abs. and 20 °C

Model 6001 and 6002

Tube Type C Model-No.	Pressure [bar] max	1.4404 Pressure drop for water [mm H_2O]	Glas Pressure drop for water [mm H_2O]	Tube length (± 1mm) [mm]	R	DN
C30-00251	15	30	15	300	1/2"	15
C30-00401	15	30	15	300	1/2"	15

6000 3 0005 05-09 E M

Options

60-AMM ... 60-AMD

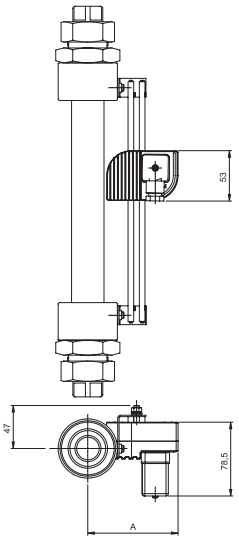

60-AMR ... 60-AMO

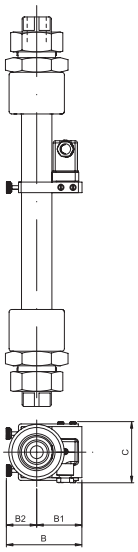

Dimensions 60-AMM ... 60-AMD

DN	A
15 – 20	90
20 – 25	96
40	111
50	117
65 – 80	130

Dimensions 60-AMR ... 60-AMO

DN	B1	B2	B	C
15 – 20	50	31	81	56
20 – 25	52	35	87	70
40	60	41	101	96
50	71	45	116	112
65 – 80	84	52	136	135

Microswitch 60-AMM

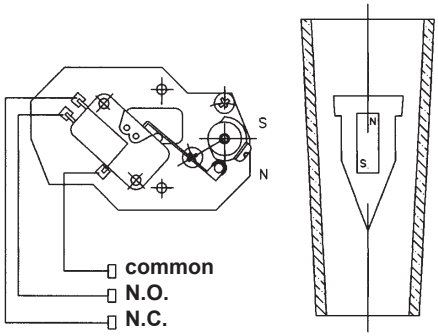

For measuring ranges from 40 to 400 l/h water and 0,7 to 7 Nm³/h air

The magnet in the float operates the micro switch (change over contact) mounted in an aluminium case.

- 1 or 2 adjustable limit switches
- Switch values: 3 (1) A, 250 V ~ (VDE/CEE)
- Hysteresis: ± 10 % from full scale
- Ambient temperature: -25 °C to +80 °C
- Mechanical lifetime: 10^7 switch operations

(gold-plated contacts on request)

6000 4 0004 05-09 E M

Options

Inductive contact 60-AMD*

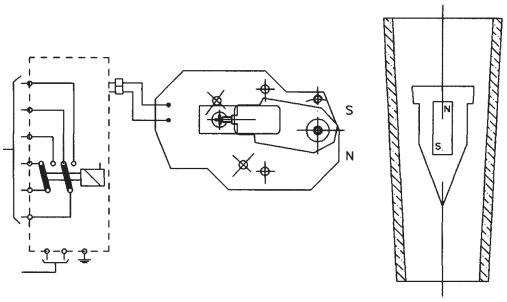

For measuring ranges from 40 - 400 l/h water and 0,7 - 7 Nm³/h air

The magnet in the float operates the inductive contact in an aluminium box.
(Type SJ 3,5 N NAMUR / DIN 19234)

- 1 or 2 adjustable limit switches
- Power supply: 8 V DC (switch amplifier)
- Ambient temperature: -25 °C to +70 °C

switch amplifier (on request)

Model NAMUR (DIN 19234), for 1 or 2 inductive contacts

- Power supply: 24...230 V AC, 50 - 60 Hz
  24...250 V DC
- Input: intrinsically safe circuit EEx ia IIC
- Output: 1 or. 2 relays
- Load: 2...5 A / 40 V DC
- Ambient temperature: -25 °C to +70 °C

* requires amplifier realy

Optical alarm 60-AMO**

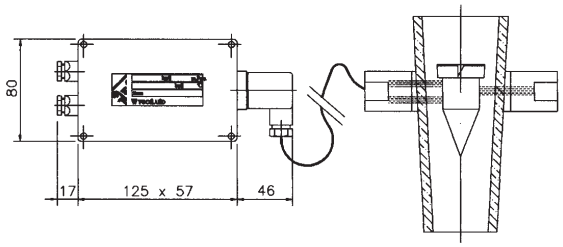

For measuring ranges from 6 - 60 l/h water and 0,1 - 1 Nm³/h air

The optical contact (infrared light) will be activated by interruption of the light beam through the float.
The sensor is mounted in a PVC support.
The relay is in a separate aluminum box (IP 65).
The cable length between the control relay and the sensor is 1,5 m.
** Glassfloat not suitable

- 1 or 2 adjustable limit switches (change over)
- Load: 250 V AC max. , 2 A max. , 500 VA max.
- Hysteresis: ± 5 % from full scale
- Ambient temperature: -10 °C to +60 °C
- Power supply: 24 V, 110 V, 220 V, 240 V, 50/60 Hz

Reed-contact 60-AMR

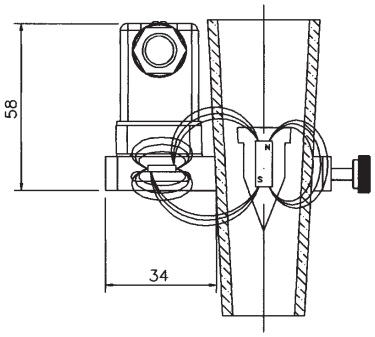

For measuring ranges from 10 - 100 l/h water and 0,17 - 1,7 Nm³/h air

The magnet in the float operates the bi-stable reed-contact (normally open, normally closed)*** in a plastic-box

- 1 or 2 adjustable limit switches
- Switch values: 0,5 A / 250 V DC / 12 VA
- Hysteresis: ± 5 % from full scale
- Ambient temperature: -15 °C to +60 °C
- Power supply: 220 V AC, load: 1 A
  24 V DC, load: 1 A

*** Please specify an your order !

6000 5 0005 05-09 E M

Analog transmitter 60-TMUR 0...4 - 20 mA

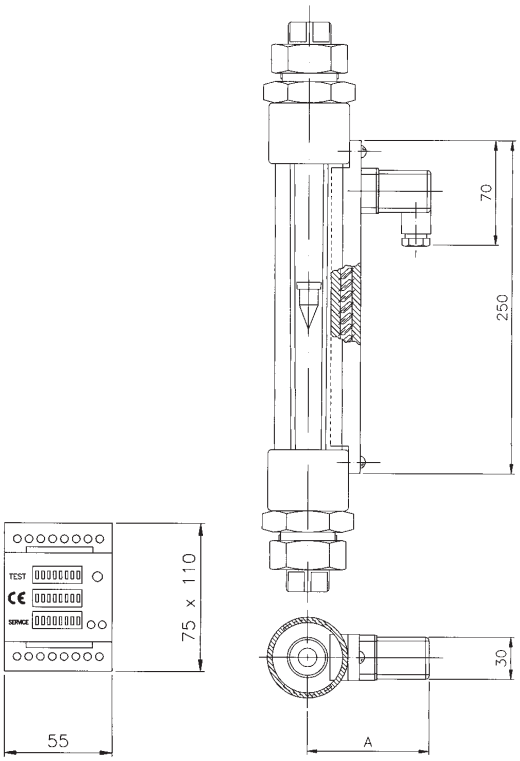

For measuring ranges from 40 - 400 l/h water and 0,7 - 7 Nm³/h air

On the body of the flow monitor is a movable plastic case (PP), with an integrated reed switch chain, fitted.
The electronic is in a separate IP 40 Box (DIN 46277).

– Power supply:	24, 110, 220 V AC 50 - 60 Hz 24 V DC
– Input:	0 - 20 mA, 4 - 20 mA 0 - 5 V, 0 - 10 V
– Electrical connection:	4-wire system
– Number of steps:	max. 18 steps on the full range
– Accuracy:	± 7 % from full scale
– Ambient temperature	-20 °C to +70 °C

Dimensions of 60-TMUR

DN	A
15 – 20	80
20 – 25	85
40	101
50	107
65 – 80	120

6000 4 0004 05-09 E M

meister strömungstechnik gmbh
Im Gewerbegebiet 2
63831 Wiesen
Germany
Tel.: +49 (0) 6096 / 97 20 - 0
Fax: +49 (0) 6096 / 97 20 - 30
E-Mail: vertrieb@meister-flow.com
Internet: www.meister-flow.com

DWM/A

- wide measuring range
- sturdy construction
- high operating pressure

02

DWM/A-L

- wide measuring range
- sturdy construction
- high operating pressure

02

DWM

- wide switch range
- sturdy construction
- high operating pressure

02

DWM-L

- wide switch range
- sturdy construction
- high operating pressure

02

DUM/A

- wide measuring range
- sturdy construction
- any orientation

02

DUM

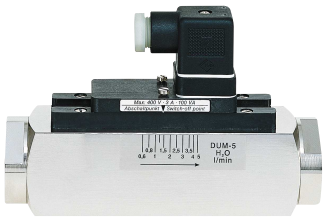

- wide switch range
- sturdy construction
- any orientation

02

M-21

- high accuracy
- small overall length
- low pressure drop

WBM

- for high flowrates
- flange connection

RVM/U-1
RVM/U-2
RVM/U-4

- compact construction
- any orientation
- high operating pressure

RVM/U-L1
RVM/U-L2
RVM/U-L4

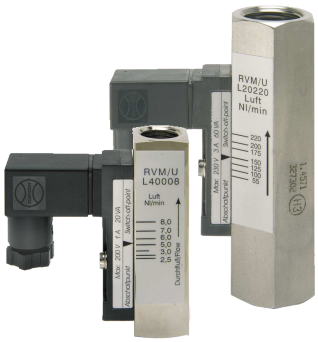

- compact construction
- any orientation
- high operating pressure

RVM/U-S4

- high switch accuracy
- high pressure resistance
- hose connection

RVM/UM

- low switch point
  at high flowrates
- high operating pressure

RMU-A
RMU-B

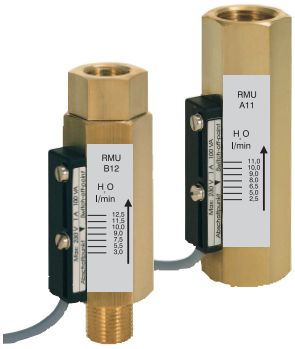

- compact construction
- any orientation
- high operating pressure

SC-250

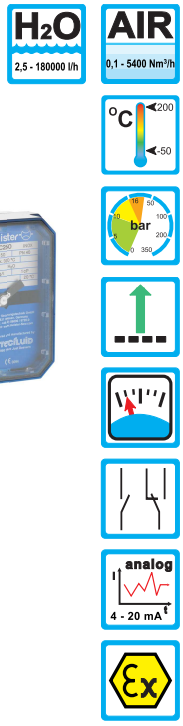

- high accuracy
- sturdy construction
- large nominal sizes

Flow Monitor Flow Indicator

DWM/A

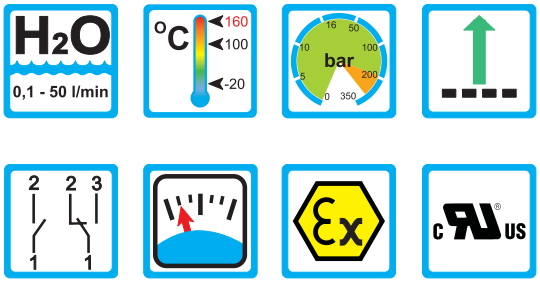

Range of Application

Operation

- Float measuring principle

Application

- Cooling systems and cooling circuits
- Mechanical engineering
- Medicine technology
- Pharma industry
- Chemical industry
- Research and development

Features

- High reliability
- High switch accuracy
- Wide switch range
- Infinitely variable switchpoint, adjustment through user
- EX-version to ATEX available
- High pressure resistance
- Threaded connection, special threads on request

Installation hints

- The operating instructions for DWM/A must be observed!
- Download: www.meister-flow.com

Operating Data

Operating pressure max.	200 bar (Brass) 300 bar (Stainless steel)
Pressure drop	0,02 - 0,2 bar
Maximum temperature	100 °C (optional 160 °C)
Accuracy	±5 % of full scale

Measuring Ranges

Type	Flow ranges for H_2O at 20°C [1]		
	[l/min]	[gph]	[gpm]
DWM/A-1,5	0,1 - 1,5	1,5 - 23,8	
DWM/A-3	0,2 - 3	3,0 - 47,5	
DWM/A-8	0,3 - 8	5,0 - 127,0	
DWM/A-12	1 - 12	16,0 - 190,0	
DWM/A-18	2 - 18	32,0 - 285,0	
DWM/A-35	3 - 35	50,0 - 555,0	
DWM/A-50	4 - 50	65,0 - 790,0	

[1] The specified data are switch-off points other switch ranges on request.

DWM/A 1 0003 06-09 E M

Technical Data

Mechanical drawing

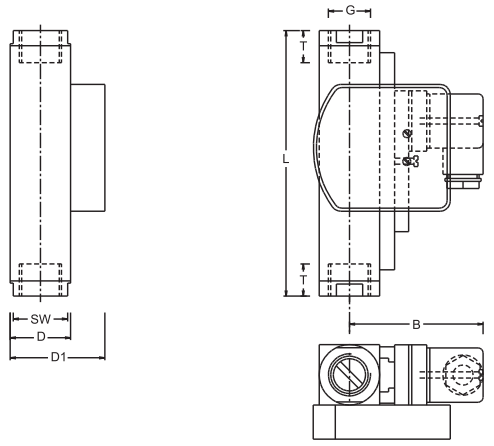

Connection diagram

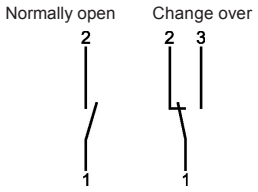

Summary of types

Type:	Overall dimensions [mm]								Weight approx. [g]
	SW	D	D1	B	G	DN	T	L	
DWM/A-1,5	27	30	47	71	1/4"	8	14	131	850
DWM/A-3					3/8"	10	19		
DWM/A-8					1/2"	15	19		
DWM/A-12									
DWM/A-18	27	30	47	71	1/2"	15	19	148	800
	32				3/4"	20	17	174	1010
DWM/A-35	34	76	57	76	3/4"	20	18	152	1500
DWM/A-50	40				1"	25	19	156	1500

Electrical Data

Change over	250V • 1,5A • 50VA [2]
Normally open	250V • 3A • 100VA
ATEX II 2 G Ex mb II T6 & ATEX II 2 D Ex tD A21 IP67 T80 °C	
ATEX II 2 G Ex mb II T5 & ATEX II 2 D Ex tD A21 IP67 T100 °C	
Change over	250V • 1A • 30VA
Normally open	250V • 2A • 60VA
Change over M 12x1 (-20 °C - 85 °C)	250V • 1,5A • 50VA [2]
Normally open M 12x1 (-20 °C - 85 °C)	250V • 3A • 100VA
Change over SPS	250V • 1A • 60VA

Ingress Protection:

IP65: plug connection DIN 43650 Form A

IP67: 1 m sealed in cable, (with EEx-version 2 m)
or plug connection M 12x1

Output Signal

The contact opens / changes when the flow decreases below the set point.

Power supply

Not required (potentialfree reed contacts)

Plug types

Other plug types or cable lengths on request

[2] Minimum load 3 VA

Material

Brass Version

Wetted parts:

Float:	Brass nickel-plated
Gaskets:	NBR (optional FKM, EPDM) [3]
Threaded rings: (only DWM/A-35, -50 (1"))	Brass
Centering washer: (DWM/A-35, DWM/A-50)	Brass nickel-plated
Fittings: (not for DWM/A-35, -50 (1"))	Brass nickel-plated
Indicator:	Makrolon / Brass nickel-plated

All other wetted parts: Brass nickel-plated

Stainless Steel

Wetted parts:

Float:	1.4571
Gaskets:	FKM (optional NBR, EPDM) [3]
Threaded rings: (only DWM/A-35, -50 (1"))	1.4571
Centering washer: (DWM/A-35, DWM/A-50)	1.4571
Fittings: (not for DWM/A-35, -50 (1"))	1.4571
Indicator:	Makrolon / Brass nickel-plated

All other wetted parts: 1.4571

[3] Other gaskets materials on request

DWM/A 2 0011 06-09 E M

meister strömungstechnik gmbh
Im Gewerbegebiet 2
63831 Wiesen
Germany
Tel.: +49 (0) 6096 / 97 20 - 0
Fax: +49 (0) 6096 / 97 20 - 30
E-Mail: vertrieb@meister-flow.com
Internet: www.meister-flow.com

Flow Monitor Flow Indicator

DWM/A-L

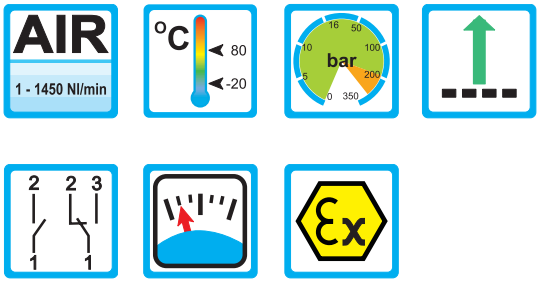

Range of Application

Operation

- Float measuring princile

Application

- Cooling systems and cooling circuits
- Mechanical engineering
- Medicine technology
- Pharma industry
- Chemical industry
- Research and development

Features

- High reliability
- High switch accuracy
- Wide switch range
- Infinitely variable switchpoint,adjustment through user
- EX-version to ATEX available
- High pressure resistance
- Threaded connection, special threads on request

Installation hints

- The operating instructions for DWM/A-L must be observed!
- Download: www.meister-flow.com

Operating Data

Operating pressure max.	200 bar (Brass) 300 bar (Stainless steel)
Pressure drop	0,02 - 0,4 bar
Maximum temperature	80 °C
Accuracy	±10 % of full scale

Measuring Ranges

Type	Switch range for Air at 1 bar abs. and 20 °C [1]		
	[Nl/min]	[SCFH]	[SCFM]
DWM/A-L1,5	1 - 28	2,0 - 59,0	
DWM/A-L3	4 - 60	8,0 - 127,0	
DWM/A-L8	6 - 160	15,0 - 340,0	
DWM/A-L12	20 - 240	40,0 - 510,0	
DWM/A-L18	40 - 360	80,0 - 760,0	
DWM/A-L50	60 - 700		2,0 - 24,5
DWM/A-L100	200 - 1450		11,0 - 106,0

1) The specified data are switch-off points, other switch ranges on request.

DWM/A-L 1 0003 06-09 E M

Technical Data

Mechanical drawing

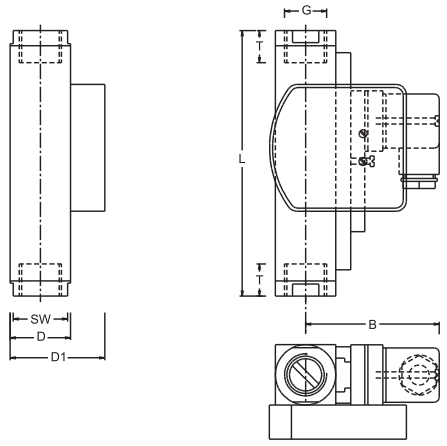

Connection diagram

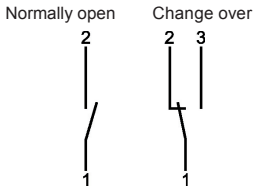

Summary of types

Type:	Overall dimensions [mm]								Weight approx. [g]
	SW	D	D1	B	G	DN	T	L	
DWM/A-L1,5	27	30	47	71	1/4"	8	14	130	850
DWM/A-L3					3/8"	10	19		
DWM/A-L8					1/2"	15	19		
DWM/A-L12									
DWM/A-L18	27	30	47	71	1/2"	15	19	148	900
					3/4"	20	17		1010
DWM/A-L50	34	40	57	76	3/4"	20	18	152	1400
	40				1"	25	19	156	1100
DWM/A-L100	50	50	67	81	1"	25	20	200	2800

Electrical Data

Change over	250V • 1,5A • 50VA [2]
Normally open	250V • 3A • 100VA
ATEX II 2 G Ex mb II T6 & ATEX II 2 D Ex tD A21 IP67 T80 °C	
ATEX II 2 G Ex mb II T5 & ATEX II 2 D Ex tD A21 IP67 T100 °C	
Change over	250V • 1A • 30VA
Normally open	250V • 2A • 60VA
Change over M 12x1 (-20 °C - 85 °C)	250V • 1,5A • 50VA [2]
Normally open M 12x1 (-20 °C - 85 °C)	250V • 3A • 100VA
Change over SPS	250V • 1A • 60VA

Ingress Protection:

IP65: plug connection DIN 43650 Form A

IP67: 1 m sealed in cable, (with EEx-version 2 m)
or plug connection M 12x1

Output Signal

The contact opens / changes when the flow decreases below the set point.

Power supply

Not required (potentialfree reed contacts)

Plug types

Other plug types or cable lengths on request

[2] Minimum load 3 VA

Material

Brass Version

Wetted parts:

Float:	POM
Gaskets:	NBR (optional FKM, EPDM) [3]
Threaded rings: (only DWM/A-L-50, -100 (1"))	Brass
Centering washer: (DWM/A-L-50)	Brass nickel-plated
Fittings: (not for DWM/A-L-50, -100 (1"))	Brass nickel-plated
Indicator:	Makrolon / Brass nickel-plated

All other wetted parts: Brass nickel-plated

Stainless Steel

Wetted parts:

Float:	POM
Gaskets:	FKM (optional NBR, EPDM) [3]
Threaded rings: (only DWM/A-L-50, -100 (1"))	1.4571
Centering washer: (DWM/A-L-50)	1.4571
Fittings: (not for DWM/A-L-50, -100 (1"))	1.4571
Indicator:	Makrolon / Brass nickel-plated

All other wetted parts: 1.4571

[3] Other gaskets materials on request

DWM/A-L 2 0010 06-09 E M

meister strömungstechnik gmbh
Im Gewerbegebiet 2
63831 Wiesen
Germany
Tel.: +49 (0) 6096 / 97 20 - 0
Fax: +49 (0) 6096 / 97 20 - 30
E-Mail: vertrieb@meister-flow.com
Internet: www.meister-flow.com

Flow Monitor

DWM

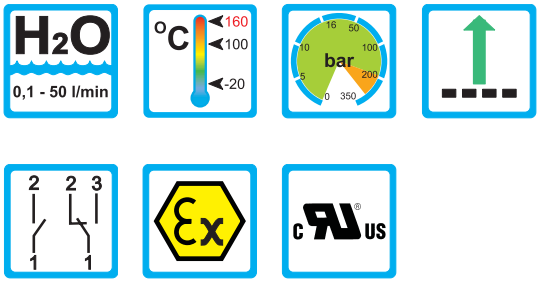

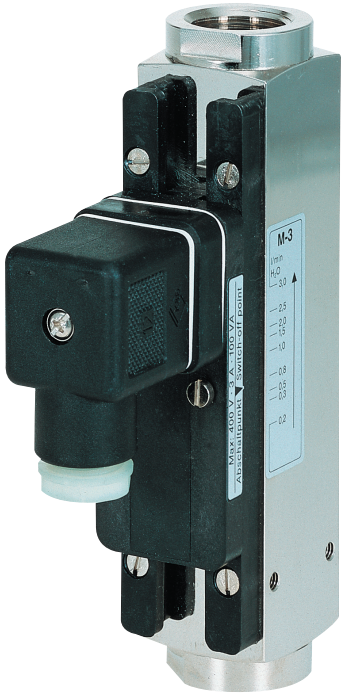

Range of Application

Operation

- Float measuring principle

Application

- Cooling systems and cooling circuits
- Mechanical engineering
- Medicine technology
- Pharma industry
- Chemical industry
- Research and development

Features

- High reliability
- High switch accuracy
- Wide switch range
- Infinitely variable switchpoint, adjustment through user
- EX-version to ATEX available
- High pressure resistance
- Threaded connection, special threads on request

Installation hints

- The operating instructions for DWM must be observed!
- Download: www.meister-flow.com

Operating Data

Operating pressure max.	200 bar (Brass) 300 bar (Stainless steel)
Pressure drop	0,02 - 0,2 bar
Maximum temperature	100 °C (optional 160 °C)
Accuracy	±5 % of full scale

Measuring Ranges

Type	Flow ranges for H_2O at 20°C [1]		
	[l/min]	[gph]	[gpm]
DWM-1,5	0,1 - 1,5	1,5 - 23,8	
DWM-3	0,2 - 3	3,0 - 47,5	
DWM-8	0,3 - 8	5,0 - 127,0	
DWM-12	1 - 12	16,0 - 190,0	
DWM-18	2 - 18	32,0 - 285,0	
DWM-35	3 - 35	50,0 - 555,0	
DWM-50	4 - 50	65,0 - 790,0	

[1] The specified data are switch-off points, other switch ranges on request.

DWM 1 0003 06-09 E M

Technical Data

Mechanical drawing

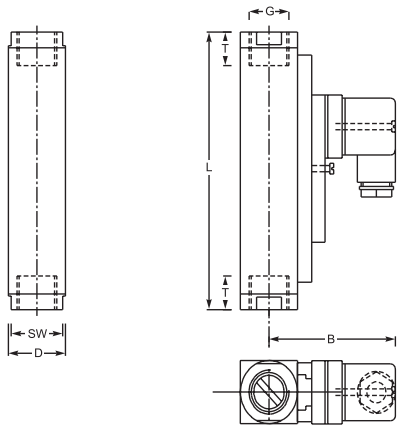

Connection diagram

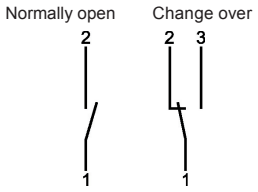

Summary of types

Type:	Overall dimensions [mm]							Weight approx. [g]
	SW	D	B	G	DN	T	L	
DWM-1,5	27	30	71	1/4"	8	14	131	800
DWM-3				3/8"	10	19		
DWM-8				1/2"	15	19		
DWM-12								
DWM-18	27	30	71	1/2"	15	19	148	800
	32			3/4"	20	17	174	960
DWM-35	34	40	76	3/4"	20	18	152	1450
DWM-50	40			1"	25	19	156	1450

Electrical Data

Change over	250V • 1,5A • 50VA [2]
Normally open	250V • 3A • 100VA
ATEX II 2 G Ex mb II T6 & ATEX II 2 D Ex tD A21 IP67 T80 °C	
ATEX II 2 G Ex mb II T5 & ATEX II 2 D Ex tD A21 IP67 T100 °C	
Change over	250V • 1A • 30VA
Normally open	250V • 2A • 60VA
Change over M 12x1 (-20 °C - 85 °C)	250V • 1,5A • 50VA [2]
Normally open M 12x1 (-20 °C - 85 °C)	250V • 3A • 100VA
Change over SPS	250V • 1A • 60VA

Ingress Protection:

IP65: plug connection DIN 43650 Form A

IP67: 1 m sealed in cable, (with EEx-version 2 m)
or plug connection M 12x1

Output Signal

The contact opens / changes when the flow decreases below the set point.

Power supply

Not required (potentialfree reed contacts)

Plug types

Other plug types or cable lengths on request

[2] Minimum load 3 VA

Material

Brass Version

Wetted parts:

Float:	Brass nickel-plated
Gaskets:	NBR (optional FKM, EPDM) [3]
Threaded rings: (only DWM-35 (1"), DWM-50 (1"))	Brass
Centering washer: (DWM-35, DWM-50)	Brass nickel-plated
Fittings: (not for DWM-35, -50 (1"))	Brass nickel-plated

All other wetted parts: Brass nickel-plated

Stainless Steel

Wetted parts:

Float:	1.4571
Gaskets:	FKM (optional NBR, EPDM) [3]
Threaded rings: (only DWM-35 (1"), DWM-50 (1"))	1.4571
Centering washer: (DWM-35, DWM-50)	1.4571
Fittings: (not for DWM-35, -50 (1"))	1.4571

All other wetted parts: 1.4571

[3] Other gaskets materials on request

DWM 2 0010 06-09 E M

meister strömungstechnik gmbh
Im Gewerbegebiet 2
63831 Wiesen
Germany
Tel.: +49 (0) 6096 / 97 20 - 0
Fax: +49 (0) 6096 / 97 20 - 30
E-Mail: vertrieb@meister-flow.com
Internet: www.meister-flow.com

Flow Monitor

DWM-L

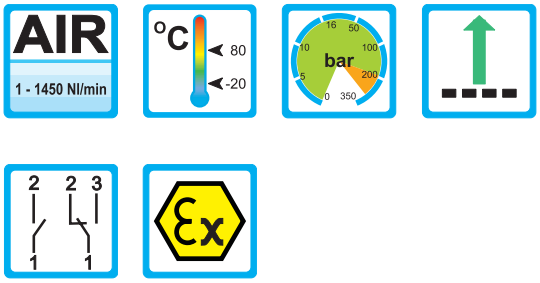

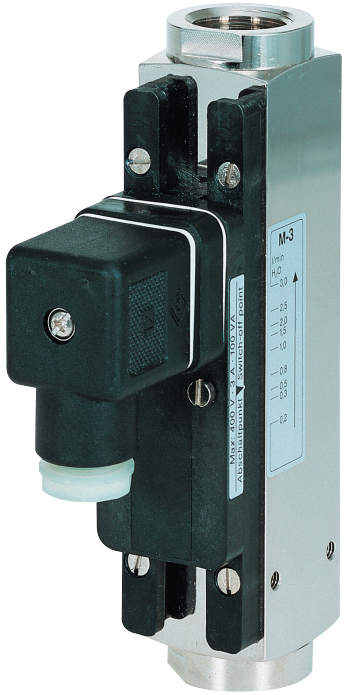

Range of Application

Operation

- Float measuring principle

Application

- Cooling systems and cooling circuits
- Mechanical engineering
- Medicine technology
- Pharma industry
- Chemical industry
- Research and development

Features

- High reliability
- High switch accuracy
- Wide switch range
- Infinitely variable switchpoint adjustment through user
- EX-version to ATEX available
- High pressure resistance
- Threaded connection, special threads on request

Installation hints

- The operating instructions for DWM-L must be observed!
- Download: www.meister-flow.com

Operating data

Operating pressure max.	200 bar (Brass) 300 bar (Stainless steel)
Pressure drop	0,02 - 0,4 bar
Maximum temperature	80 °C
Accuracy	±10 % of full scale

Measuring Ranges

Type	Switch range for Air at 1 bar abs. and 20 °C (1)		
	[Nl/min]	[SCFH]	[SCFM]
DWM-L1,5	1 - 28	2,0 - 59,0	
DWM-L3	4 - 60	8,0 - 127,0	
DWM-L8	6 - 160	15,0 - 340,0	
DWM-L12	20 - 240	40,0 - 510,0	
DWM-L18	40 - 360	80,0 - 760,0	
DWM-L50	60 - 700		2,0 - 24,5
DWM-L100	200 - 1450		7,0 - 51,0

1) The specified data are switch-off points, other switch ranges on request.

DWM-L 1 0003 06-09 E M

Technical Data

Mechanical drawing

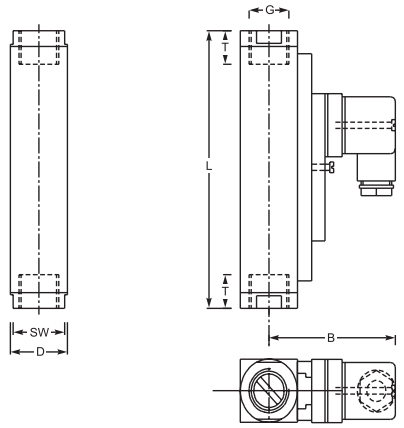

Connection diagram

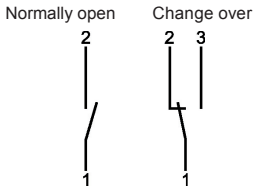

Summary of types

Type:	Overall dimensions [mm]							Weight approx. ca. [g]
	SW	D	B	G	DN	T	L	
DWM-L1,5	27	30	71	1/4"	8	14	130	800
DWM-L3				3/8"	10	19		
DWM-L8				1/2"	15	19		
DWM-L12								
DWM-L18	27	30	71	1/2"	15	19	148	850
				3/4"	20	17	174	960
DWM-L50	34	40	76	3/4"	20	18	152	1350
	40			1"	25	19	156	1050
DWM-L100	50	50	81	1"	25	20	200	2750

Electrical Data

Change over	250V • 1,5A • 50VA [2]
Normally open	250V • 3A • 100VA
ATEX II 2 G Ex mb II T6 & ATEX II 2 D Ex tD A21 IP67 T80 °C	
ATEX II 2 G Ex mb II T5 & ATEX II 2 D Ex tD A21 IP67 T100 °C	
Change over	250V • 1A • 30VA
Normally open	250V • 2A • 60VA
Change over M 12x1 (-20 °C - 85 °C)	250V • 1,5A • 50VA [2]
Normally open M 12x1 (-20 °C - 85 °C)	250V • 3A • 100VA
Change over SPS	250V • 1A • 60VA

Ingress Protection:

IP65: plug connection DIN 43650 Form A

IP67: 1 m sealed in cable, (with EEx-version 2 m)
or plug connection M 12x1

Output Signal

The contact opens / changes when the flow decreases below the set point.

Power supply

Not required (potentialfree reed contacts)

Plug types

Other plug types or cable lengths on request

[2] Minimum load 3 VA

Material

Brass Version

Wetted parts:

Float:	POM
Gaskets:	NBR (optional FKM, EPDM) [3]
Threaded rings: (only DWM-L-50, -100 (1"))	Brass
Centering washer: (DWM-L-50)	Brass nickel-plated
Fittings: (not for DWM-L-50, -100 (1"))	Brass nickel-plated

All other wetted parts: Brass nickel-plated

Stainless Steel

Wetted parts:

Float:	POM
Gaskets:	FKM (optional NBR, EPDM) [3]
Threaded rings: (only DWM-L-50, -100 (1"))	1.4571
Centering washer: (DWM-L-50)	1.4571
Fittings: (not for DWM-L-50, -100 (1"))	1.4571

All other wetted parts: 1.4571

[3] Other gaskets materials on request

DWM-L 2 0010 06-09 E M

meister strömungstechnik gmbh
Im Gewerbegebiet 2
63831 Wiesen
Germany
Tel.: +49 (0) 6096 / 97 20 - 0
Fax: +49 (0) 6096 / 97 20 - 30
E-Mail: vertrieb@meister-flow.com
Internet: www.meister-flow.com

Flow Monitor Flow Indicator

DUM/A

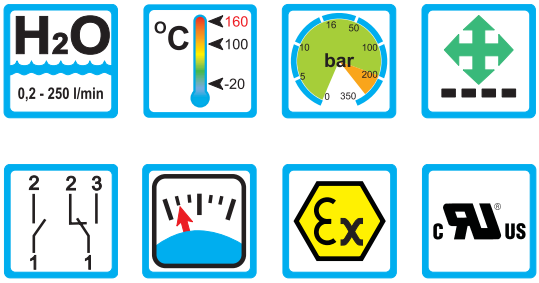

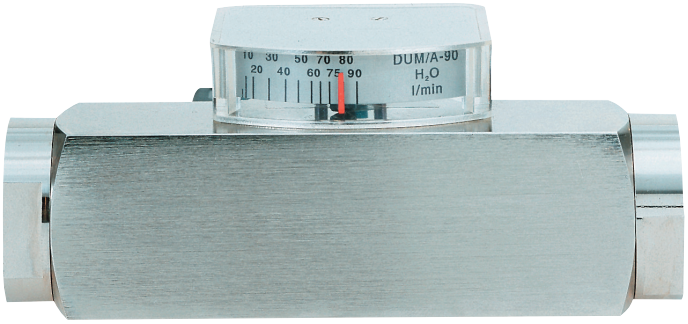

Range of Applications

Operation

- Float measuring principle

Application

- Cooling systems and cooling circuits
- Mechanical engineering
- Medicine technology
- Pharma industry
- Chemical industry
- Research and development

Features

- Universal orientation
- High reliability
- High switch accuracy
- Wide switch range
- Infinitely variable switchpoint adjustment through user
- EX-version to ATEX available
- High pressure resistance
- Threaded connection, special threads on request

Installation hints

- The operating instructions for DUM/A must be observed!
- Download: www.meister-flow.com

Operating Data

Operating pressure max.	200 bar (Brass) 300 bar (Stainless steel)
Pressure drop	0,02 - 0,8 bar
Maximum temperature	100 °C (optional 160 °C)
Accuracy	±5 % of full scale

Measuring Ranges

Type	Flow ranges for H_2O at 20 °C (1)		
	[l/min]	[gph]	[gpm]
DUM/A-4	0,2 - 4	3,0 - 63,5	
DUM/A-5	0,6 - 5	9,5 - 79,0	
DUM/A-8	0,5 - 8	8,0 - 127,0	
DUM/A-14	1 - 14	15,0 - 222,0	
DUM/A-28	1 - 28	15,0 - 445,0	
DUM/A-40	2 - 40	30,0 - 635,0	
DUM/A-55	4 - 55	60,0 - 870,0	
DUM/A-70	1 - 70		0,3 - 18,5
DUM/A-90	8 - 90		2,1 - 23,8
DUM/A-110	5 -110		1,3 - 29,0
DUM/A-150	10 -150		2,6 - 39,5
DUM/A-220	35 -220		9,0 - 58,0
DUM/A-250	35 -250		9,0 - 66,0

(1) The specified data are switch-off points, other switch ranges on request.

DUM/A 1 0003 06-09 E M

Technical Data

Mechanical drawing

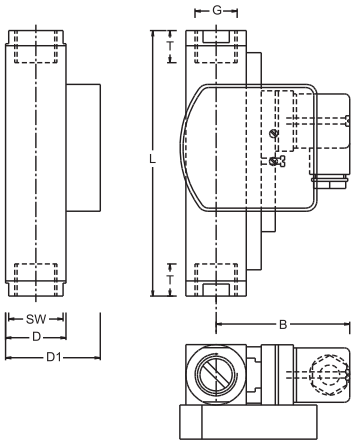

Connection diagram

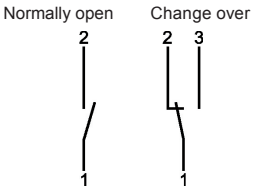

Summary of types

Type:	Overall dimensions [mm] SW	D	D1	B	G	DN	T	L	Weight approx. [g]
DUM/A-4									
DUM/A-5					1/4"	8			
DUM/A-8	27	30	47	71	3/8"	10	14	130	900
DUM/A-14					1/2"	15			
DUM/A-28									
DUM/A-40	27	30	47	71	1/2"	15	14	148	950
DUM/A-55					3/4"	20	16	174	
DUM/A-70	34	40	57	76	3/4"	20	18	152	1450
DUM/A-90	40	40	57	76	1"	25	19	156	1150
DUM/A-110									
DUM/A-150	50	50	57	76	1 1/4"	32	21	200	2800
DUM/A-220	50	50	67	81	1 1/4"	32	21	200	3050
DUM/A-250	60	60	77	82	1 1/2"	40	24	200	3850

Electrical Data

Change over	250V • 1,5A • 50VA [2]
Normally open	250V • 3A • 100VA
ATEX II 2 G Ex mb II T6 & ATEX II 2 D Ex tD A21 IP67 T80 °C	
ATEX II 2 G Ex mb II T5 & ATEX II 2 D Ex tD A21 IP67 T100 °C	
Change over	250V • 1A • 30VA
Normally open	250V • 2A • 60VA
Change over M 12x1 (-20 °C - 85 °C)	250V • 1,5A • 50VA [2]
Normally open M 12x1 (-20 °C - 85 °C)	250V • 3A • 100VA
Change over SPS	250V • 1A • 60VA

Ingress Protection:

IP65: plug connection DIN 43650 Form A

IP67: 1 m sealed in cable, (with EEx-version 2 m)
or plug connection M 12x1

Output Signal

The contact opens / changes when the flow decreases below the set point.

Power supply

Not required (potentialfree reed contacts)

Plug types

Other plug types or cable lengths on request

[2] Minimum load 3 VA

Material

Brass version

Wetted parts:

Spring:	1.4571
Gaskets:	NBR (optional FKM, EPDM) [3]
Threaded rings: DUM/A-70, -90, -110 (only 1") DUM/A-150, -220, -250	Brass
Centering washer: DUM/A-70, DUM/A-90, DUM/A-110	Brass nickel-plated
Indicator:	Makrolon / Brass nickel-plated

All other wetted parts: Brass nickel-plated

Stainless steel version

Wetted parts:

Spring:	1.4571
Gaskets:	FKM (optional NBR,EPDM) [3]
Threaded rings: DUM/A-70, -90, -110 (only 1") DUM/A-150, -220, -250	1.4571
Centering washer: DUM/A-70, DUM/A-90, DUM/A-110	1.4571
Indicator:	Makrolon / Brass nickel-plated

All other wetted parts: 1.4571

[3] Other gasket materials on request

DUM/A 2 0015 10-09 E M

meister strömungstechnik gmbh
Im Gewerbegebiet 2
63831 Wiesen
Germany
Tel.: +49 (0) 6096 / 97 20 - 0
Fax: +49 (0) 6096 / 97 20 - 30
E-Mail: vertrieb@meister-flow.com
Internet: www.meister-flow.com

Flow Monitor

DUM

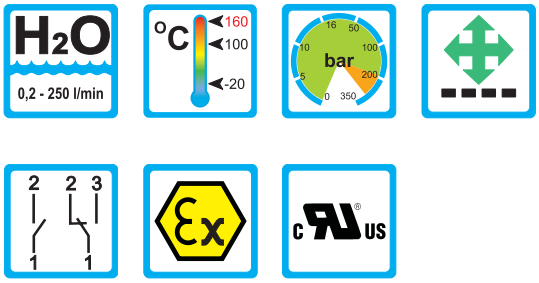

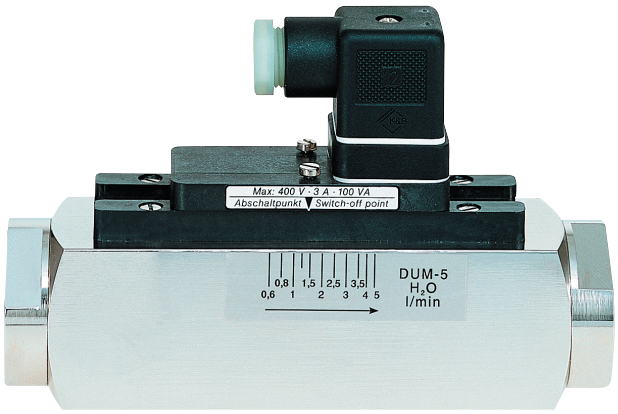

Range of Applications

Operation

- Float measuring principle

Application

- Cooling systems and cooling circuits
- Mechanical Engineering
- Medicine technology
- Pharma industry
- Chemical industry
- Research and development

Features

- Universal orientation
- High reliability
- High switch accuracy
- Wide switch range
- Infinitely variable switchpoint adjustment through user
- EX-version to ATEX available
- High pressure resistance
- Threaded connection, special threads on request

Installation hints

- The operating instructions for DUM must be observed!
- Download: www.meister-flow.com

Operating Data

Operating pressure max.	200 bar (brass) 300 bar (stainless steel)
Pressure drop	0,02 - 0,8 bar
Maximum temperature	100 °C (optional 160 °C)
Accuracy	±5 % of full scale

Measuring Ranges

Type	Flow ranges for H_2O at 20 °C (1)		
	[l/min]	[gph]	[gpm]
DUM-4	0,2 - 4	3,0 - 63,5	
DUM-5	0,6 - 5	9,5 - 79,0	
DUM-8	0,5 - 8	8,0 - 127,0	
DUM-14	1 - 14	15,0 - 222,0	
DUM-28	1 - 28	15,0 - 445,0	
DUM-40	2 - 40	30,0 - 635,0	
DUM-55	4 - 55	60,0 - 870,0	
DUM-70	1 - 70		0,3 - 18,5
DUM-90	8 - 90		2,1 - 23,8
DUM-110	5 -110		1,3 - 29,0
DUM-150	10 -150		2,6 - 39,5
DUM-220	35 -220		9,0 - 58,0
DUM-250	35 -250		9,0 - 66,0

(1) The specified data are switch-off points, other switch ranges on request.

DUM 0003 06-09 D M

Technical Data

Mechanical drawing

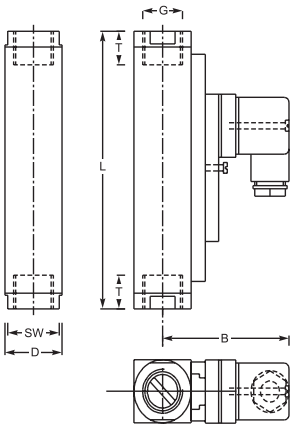

Connection diagram

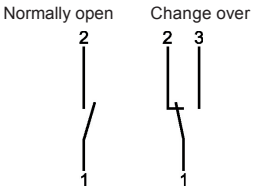

Summary of types

Type:	Overall dimensions [mm]							Weight approx. [g]
	SW	D	B	G	DN	T	L	
DUM-4								
DUM-5				1/4"	8			
DUM-8	27	30	71	3/8"	10	14	130	850
DUM-14				1/2"	15			
DUM-28								
DUM-40	27	30	71	1/2"	15	14	148	900
DUM-55				3/4"	20	16	174	
DUM-70	34	40	76	3/4"	20	18	152	1400
DUM-90	40	40	76	1"	25	19	156	1100
DUM-110								
DUM-150	50	50	76	1 1/4"	32	21	200	2750
DUM-220	50	50	81	1 1/4"	32	21	200	3000
DUM-250	60	60	82	1 1/2"	40	24	200	3800

Electrical Data

Change over	250V • 1,5A • 50VA [2]
Normally open	250V • 3A • 100VA
ATEX II 2 G Ex mb II T6 & ATEX II 2 D Ex tD A21 IP67 T80 °C	
ATEX II 2 G Ex mb II T5 & ATEX II 2 D Ex tD A21 IP67 T100 °C	
Change over	250V • 1A • 30VA
Normally open	250V • 2A • 60VA
Change over M 12x1 (-20 °C - 85 °C)	250V • 1,5A • 50VA [2]
Normally open M 12x1 (-20 °C - 85 °C)	250V • 3A • 100VA
Change over SPS	250V • 1A • 60VA

Ingress Protection:

IP65: plug connection DIN 43650 Form A

IP67: 1 m sealed in cable, (with EEx-version 2 m)
or plug connection M 12x1

Output Signal

The contact opens / changes when the flow decreases below the set point.

Power supply

Not required (potentialfree reed contacts)

Plug types

Other plug types oder cable lengths on request

[2] Minimum load 3 VA

Material

Brass version

Wetted parts:

Spring:	1.4571
Gaskets:	NBR (optional FKM, EPDM) [3]
Threaded rings: DUM-70, DUM-90, DUM-110 (only 1") DUM-150, DUM-220, DUM-250	Brass
Centering washer: DUM-70, DUM-90, DUM-110	Brass nickel-plated

All other wetted parts: Brass nickel-plated

Stainless steel version

Wetted parts:

Spring:	1.4571
Gaskets:	FKM (optional NBR,EPDM) [3]
Threaded rings: DUM-70, DUM-90, DUM-110 (only 1") DUM-150, DUM-220, DUM-250	1.4571
Centering washer: DUM-70, DUM-90, DUM-110	1.4571

All other wetted parts: 1.4571

[3] Other gasket materials on request

DUM 2 0014 10-09 E M

meister strömungstechnik gmbh
Im Gewerbegebiet 2
63831 Wiesen
Germany
Tel.: +49 (0) 6096 / 97 20 - 0
Fax: +49 (0) 6096 / 97 20 - 30
E-Mail: vertrieb@meister-flow.com
Internet: www.meister-flow.com

Flowmeter

M-21

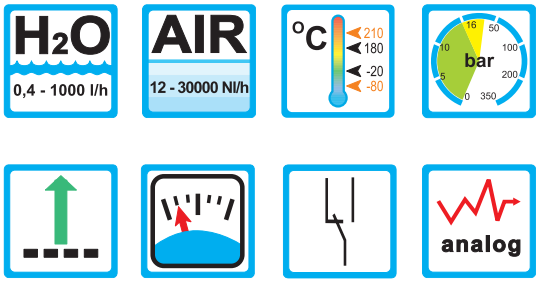

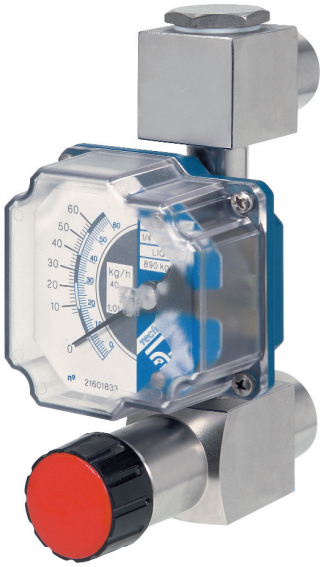

Range of Application

Operation

- Float measuring principle
  Optional with valve for flow regulation.

Application

- Water treatment
- Chemical industry
- Food industry
- Heating systems and cooling systems
- Paper industry

Features

- Easy installation
- Small size
- Low pressure drop
- Media specific scale
- Options:
  Adjustable limit switches (AMD),
  Analog transmitter (TEH-2), Pressure regulators (RCA / RCD)

Installation hints

- The operating instructions for M-21 must be observed!
- Download: www.meister-flow.com

Operating data

Operating pressure	
with needle valve	PN 16
without needle valve	PN 40
Media temperature	
without electronics	- 80 °C to +210 °C
with electronics	- 20 °C to +180 °C
	(at 20 °C ambient temperature)
Ambient temperature	
with electronics	see page 3 and page 4
Connections	see page 2
Pressure drop	see table at page 3
Accuracy classified	
VDE / VDI 3513	4 %

M-21 1 0005 10-09 E M

Technical data and materials

M-21 with female thread (BSP / NPT)

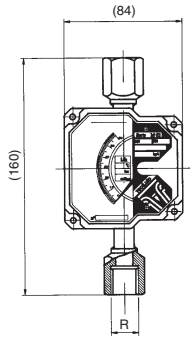

R	A
1/4"	63
1/2"	67
3/4"	72

M-21 with Clamp-connection (ISO 2852)

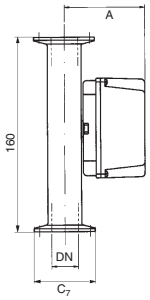

DN	A	C_7
12	66	34
21,3	68	34
25	72	50,5

M-21 with valve and threaded connection (BSP / NPT)

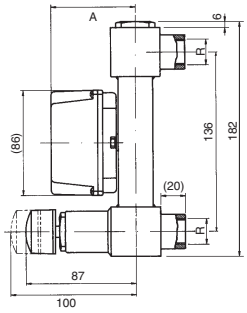

R	A
1/4"	63
1/2"	67
3/4"	72

Materials

No.	Description	Material
01	Measuring tube	Stainless steel 1.4404
02	Float	Stainless steel 1.4404
03	Ring	Stainless steel 1.4404
04	Housing baseplate	Aluminium (PTFE-coated)
05	Disc	Aluminium
06	Counter weight	Brass
07	Axle	Stainless steel 1.4401
08	Bearing	Brass
09	Pointer	Aluminium
11	Scale / name plate	Aluminium
12	Magnet	Neodym
13	Housing cover	Polycarbonate
14	Gasket	NBR
15	Magnet	Neodym
16	Magnet	AlNiCo
Wetted parts		

Cutaway drawing

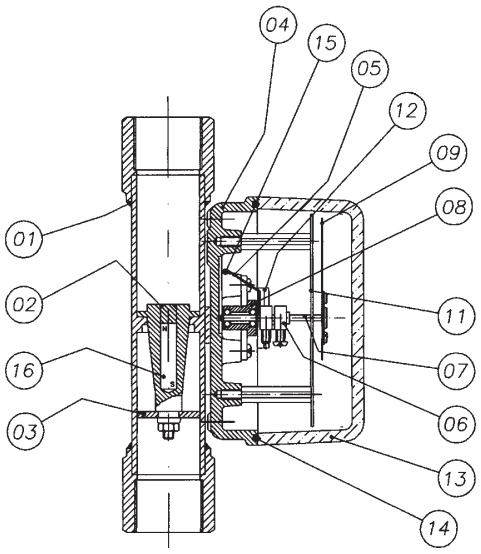

M-21 2 0004 06-09 E M

Measuring ranges and options

Measuring ranges

Tube	Measuring range H_2O bei 20 °C [l/h]	Measuring range air bei 20°C and 1 bar abs. [Nl/h]
M 21004	0,4 - 4	12 - 120
M 21006	0,6 - 6	18 - 180
M 21010	1 - 10	30 - 300
M 21016	1,6 - 16	50 - 500
M 21025	2,5 - 25	80 - 800
M 21040	4 - 40	120 - 1200
M 21060	6 - 60	160 - 1800
M 21100	10 - 100	300 - 3000
M 21160	16 - 160	500 - 5000
M 21250	25 - 250	750 - 7500
M 21400	40 - 400	1200 - 12000
M 21630	60 - 630	1800 - 18000
M 21M01	100 - 1000	3000 - 30000

Technical data

Tube	Δp [mm H_2O]	DIN	CLAMP	BSP / NPT
M 21004	280	10	12	1/4"
M 21006	280	10	12	1/4"
M 21010	300	10	12	1/4"
M 21016	300	10	12	1/4"
M 21025	300	10	12	1/4"
M 21040	320	10	12	1/4"
M 21060	320	10	12	1/4"
M 21100	320	10	12	1/4"
M 21160	340	15	21,3	1/2"
M 21250	340	15	21,3	1/2"
M 21400	400	25	25	1/2"
M 21630	400	25	25	1/2"
M 21M01	400	25	25	3/4"

Options: Inductive switch type M21-AMD

Inductive proximity switch, 3,5 mm, according to NAMUR DIN 19234, mounted in the indicator housing of the flowmeter

- M21-AMD 1...2: 1...2 adjustable limit switches
- Power supply: 8 V DC (via switch amplifier)
- Temperature: -25 °C to +70 °C

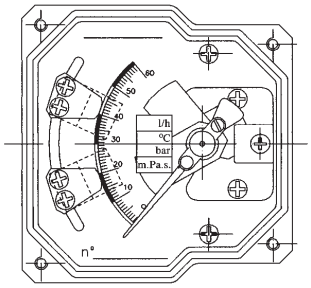

Options: Switch amplifier (on request)

Model NAMUR (DIN 19234) for 1 or 2 adjustable limit switches

- Power supply: 24...230 V AC, 50-60 Hz
  24...250 V DC
- Power consumption: < 1 W
- Input: intrinsically safe circuit EEx ia IIC
- Output: 1 or 2 relays
- Load: 2...5 A / 40 V DC
- Temperature: -25 °C to +70 °C

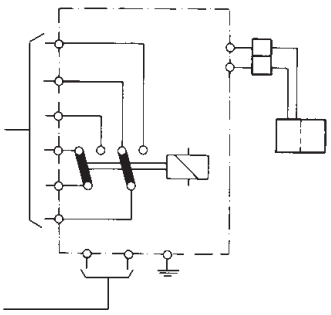

M-21 3 0005 10-09 E M

Options

Analog transmitter 4-20 mA (HALLTEC II) Type TEH 2 (2 wire-system)

• Power supply:	15 - 50 V DC
• Analog output:	4 - 20 mA (2 wire)
• Ambient temperature:	-5 °C to 70 °C
• Ingress protection:	IP65
• Accuracy:	< 0,6%
	(with reference to the pointer position)
• Max. electr. circuit load:	R_L=((Vs-10) / 0,02) Ω
	(Vs = Power supply voltage)

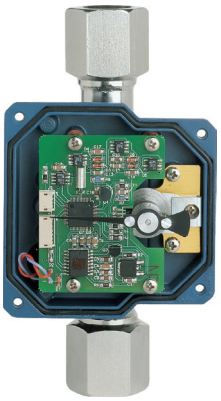

Differential pressure regulator RCA / RCD

The construction of the series M-21 allows the use of the regulator types RCA or RCD. The regulator keeps the flow constant during appearing pressure changes. The RCA will be used for gases with variable input pressure and constant output pressure. The RCD will be used for gases with constant input pressure and variable output pressure.
For liquid media only the type RCA can be used.
The flow is constant, when the pressure difference between the input and counter pressure is larger than 200 mbar.

RCA

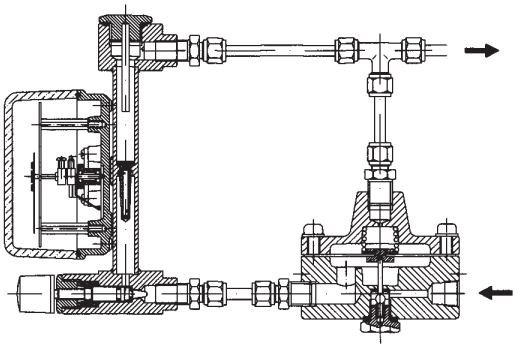

RCD

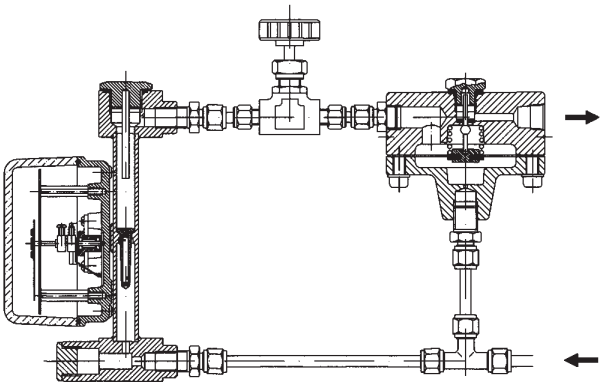

M-21 4 0004 06-09 E M

meister strömungstechnik gmbh
Im Gewerbegebiet 2
63831 Wiesen
Germany
Tel.: +49 (0) 6096 / 97 20 - 0
Fax: +49 (0) 6096 / 97 20 - 30
E-Mail: vertrieb@meister-flow.com
Internet: www.meister-flow.com

Flow Monitor

WBM-65

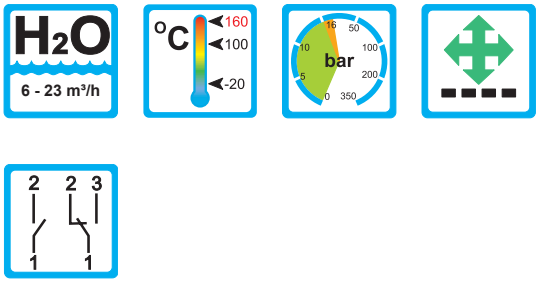

Range of Application

Operation

- Float measuring principle

Application

- Mechanical engineering
- Plant construction
- Pharma industry
- Chemical industry
- Cooling systems and cooling circuits

Charakteristika

- Universal orientation
- High reliability
- Flange-connection

Installation hints

- The operating instructions for WBM-65 must be observed!
- Download: www.meister-flow.com

Operating Data

Operating pressure max.	16 bar (brass) 16 bar (1.4571) opional: PN 25
Pressure drop at 23 m³/h	0,3 bar
Maximum temperature	100 °C (optional 160 °C)
Accuracy	±10 % of full scale

Measuring Ranges

Type	Switch point for H_2O at 20 °C [1] [m³/h]
WBM-65	
Lowest Switch point:	6
Highest Switch point:	23

[1] The specified data are switch-off points.

WBM-65 1 0002 04-10 E M

Technical Data

Mechanical drawing

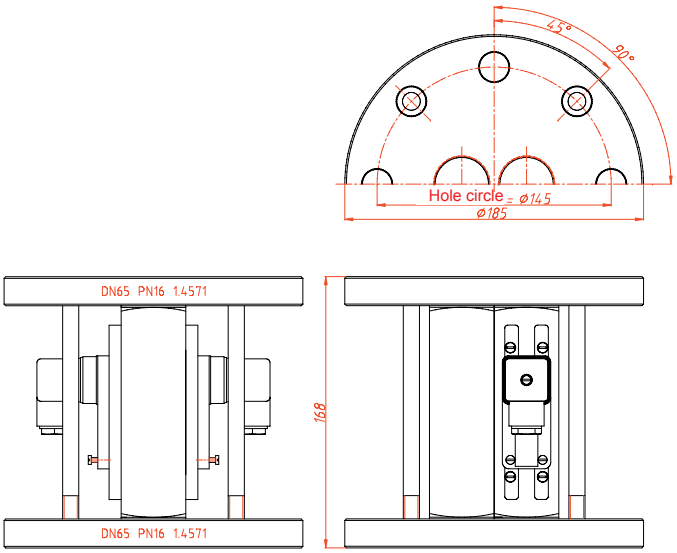

Electrical Data

Change over	250V • 1,5A • 50VA [1]
Normally open	250V • 3A • 100VA

Ingress Protection:

IP65: plug connection DIN 43650 Form A

IP67: 1 m sealed in cable

Plug types

Other plug types or cable lengths on request

[1] Minimum load 3 VA

Connection diagram

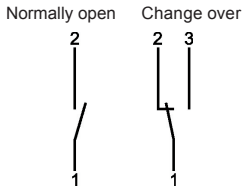

Material

Brass version

Wetted parts:

Spring:	1.4571
Gaskets:	NBR (optional FKM, EPDM) [2]
Magnets:	Hard ferrite
Housing:	Brass nickel-plated
Flange:	1.4571

All other wetted parts: Brass

Stainless steel version

Wetted parts:

Spring:	1.4571
Gaskets:	FKM (optional NBR, EPDM) [3]
Magnets:	Hard ferrite
Housing:	1.4571
Flange:	1.4571

All other wetted parts: 1.4571

[2] Other gasket materials on request

Summary of types

Type:	Overall dimensions [mm]					Weight (approx.)
	DN	PN	Flange Ø	Hole circle Ø	L	[g]
WBM-65	65	16	185	145	168	9300

Note

For further information, please refer to the operating instructions ”WBM-65”.

WBM-65 2 0001 03-10 E M

meister strömungstechnik gmbh

Im Gewerbegebiet 2
63831 Wiesen
Germany

Tel.: +49 (0) 6096 / 97 20 - 0
Fax: +49 (0) 6096 / 97 20 - 30

E-Mail: vertrieb@meister-flow.com
Internet: www.meister-flow.com

Flow Monitor

RVM/U-1

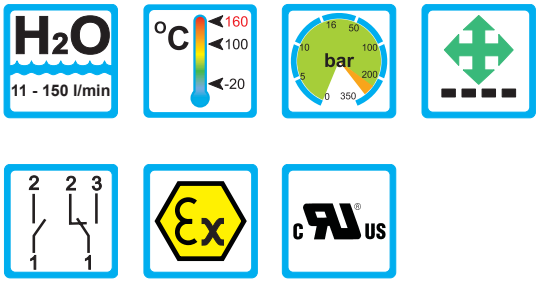

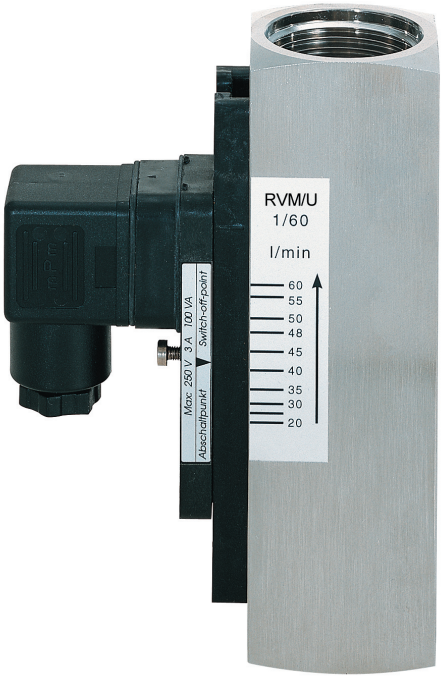

Range of Application

Operation

- Float measuring principle

Application

- Mechanical engineering
- Medicine technology
- Pharma industry
- Chemical industry
- Research and development
- Cooling systems and cooling circuits

Features

- Universal orientation
- High reliability
- High switch accuracy
- Infinitely variable switchpoint adjustment through user
- EX-version to ATEX available
- High pressure resistance
- Threaded connection, special threads on request

Installation hints

- The operating instructions for RVM/U must be observed!
- Download: www.meister-flow.com

Operating Data

Operating pressure max.	250 bar (Brass) 300 bar (Stainless Steel)
Pressure drop	0,02 - 0,4 bar
Maximum temperature	100 °C (optional 160 °C)
Accuracy	±10 % of full scale

Measuring Ranges

Type	Flow ranges for H_2O at 20 °C [1]		
	[l/min]	[gph]	[gpm]
RVM/U-1/30	11 - 30	160,0 - 480,0	
RVM/U-1/45	15 - 45	240,0 - 710,0	
RVM/U-1/60	20 - 60	320,0 - 950,0	
RVM/U-1/90	30 - 90		8,0 - 24,0
RVM/U-1/150	60 - 150		16,0 - 40,0

[1] The specified data are switch-off points, other switch ranges on request.

RVM/U-1 1 0002 06-09 E M

Technical Data

Mechanical drawing

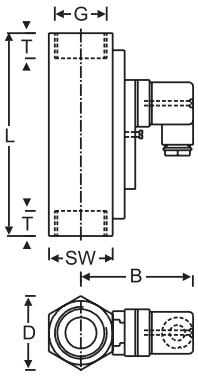

Connection diagram

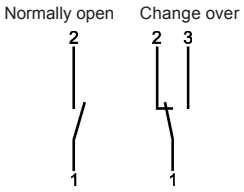

Summary of types

Type:	Overall dimensions [mm] SW	D	B	G	DN	T	L	Weight (approx.) [g]
RVM/U-1/30								
RVM/U-1/45	41	47	76	3/4"	20	21	152	1200
RVM/U-1/60				1"	25	17	130	1050
RVM/U-1/90								
RVM/U-1/150	41	47	76	1"	25	17	130	1050

Electrical Data

Change over	250V • 1,5A • 50VA [2]
Normally open	250V • 3A • 100VA
ATEX II 2 G Ex mb II T6 & ATEX II 2 D Ex tD A21 IP67 T80 °C	
ATEX II 2 G Ex mb II T5 & ATEX II 2 D Ex tD A21 IP67 T100 °C	
Change over	250V • 1A • 30VA
Normally open	250V • 2A • 60VA
Change over M 12x1 (-20 °C - 85 °C)	250V • 1,5A • 50VA [2]
Normally open M 12x1 (-20 °C - 85 °C)	250V • 3A • 100VA
Change over SPS	250V • 1A • 60VA

Ingress Protection:

IP65: plug connection DIN 43650 Form A

IP67: 1 m sealed in cable, (with EEx-version 2 m)
or plug connection M 12x1

Output Signal

The contact opens / changes when the flow decreases below the set point.

Power supply

Not required (potentialfree reed contacts)

Plug types

Other plug types or cable lengths on request

[2] Minimum load 3 VA

Material

Brass version

Wetted parts:

Spring:	1.4571
Gaskets [3]:	NBR (optional FKM, EPDM) [4]
Magnets:	Hard ferrite
Housing:	Brass nickel-plated

All other wetted parts: Brass

Stainless steel version

Wetted parts:

Spring:	1.4571
Gaskets [3]:	FKM (optional NBR, EPDM) [4]
Magnets:	Hard ferrite
Housing:	1.4571

All other wetted parts: 1.4571

[3] Threaded connections only
[4] Other gasket materials on request

RVM/U-1 2 0010 02-10 E M

meister strömungstechnik gmbh
Im Gewerbegebiet 2
63831 Wiesen
Germany
Tel.: +49 (0) 6096 / 97 20 - 0
Fax: +49 (0) 6096 / 97 20 - 30
E-Mail: vertrieb@meister-flow.com
Internet: www.meister-flow.com

Flow Monitor

RVM/U-2

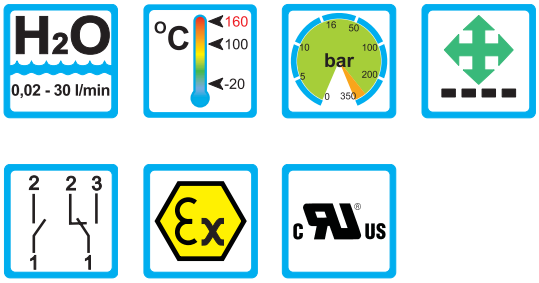

Range of Application

Operation

- Float measuring principle

Application

- Mechanical engineering
- Medicine technology
- Pharma industry
- Chemical industry
- Research and development
- Cooling systems and cooling circuits

Features

- Universal orientation
- High reliability
- High switch accuracy
- Infinitely variable switchpoint adjustment through user
- EX-version to ATEX available
- High pressure resistance
- Threaded connection, special threads on request

Installation hints

- The operating instructions for RVM/U must be observed!
- Download: www.meister-flow.com

Operating Data

Operating pressure max.	300 bar (Brass) 350 bar (Stainless Steel)
Pressure drop	0,02 - 0,3 bar
Maximum temperature	100 °C (optional 160 °C)
Accuracy	±10 % of full scale

Measuring Ranges

Type	Flow ranges for H_2O at 20 °C (1)		
	[l/min]	[gph]	[gpm]
RVM/U-2/02	0,02 - 0,2	0,3 - 3,35	
RVM/U-2/06	0,2 - 0,6	3,2 - 9,5	
RVM/U-2/1	0,4 - 1,8	6,5 - 28,5	
RVM/U-2/3	0,8 - 3,2	13,0 - 51,0	
RVM/U-2/7	2 - 7	32,0 - 111,0	
RVM/U-2/13	3 - 13	48,0 - 205,0	
RVM/U-2/20	4 - 20	65,0 - 315,0	
RVM/U-2/30	8 - 30	130,0 - 480,0	

(1) The specified data are switch-off points other switch ranges on request.

RVM/U-2 1 0002 06-09 E M

Technical Data

Mechanical drawing

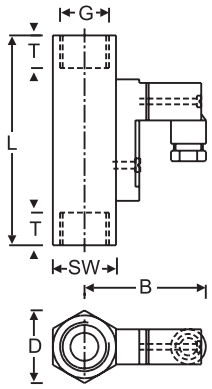

Connection diagram

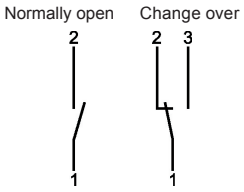

Summary of types

Type:	Overall dimensions [mm]							Weight (approx.) [g]
	SW	D	B	G	DN	T	L	
RVM/U-2/02								
RVM/U-2/06								
RVM/U-2/1								
RVM/U-2/3								
RVM/U-2/7	27	31	52	1/2"	15	14	90	350
RVM/U-2/13								
RVM/U-2/20								
RVM/U-2/30								

Electrical Data

Change over (3)	250V • 1,5A • 50VA (2)
Normally open	230V • 3A • 60VA
ATEX II 2 G Ex mb II T6 & ATEX II 2 D Ex tD A21 IP67 T80 °C	
ATEX II 2 G Ex mb II T5 & ATEX II 2 D Ex tD A21 IP67 T100 °C	
Change over	250V • 1A • 30VA
Normally open	250V • 2A • 60VA
Change over M 12x1 (-20 °C - 85 °C)	125V • 1,5A • 50VA (2)
Normally open M 12x1 (-20 °C - 85 °C)	125V • 3A • 60VA
Change over SPS (3)	250V • 1A • 60VA

Ingress Protection:

IP65: plug connection DIN 43650 Form C or plug connection M 12x1

IP67: 1 m sealed in cable, (with EEx-version 2 m)

Output Signal

The contact opens / changes when the flow decreases below the set point.

Power supply

Not required (potentialfree reed contacts)

Plug types

Other plug types or cable lengths on request

(2) Minimum load 3 VA

(3) Only with plug connection

Material

Brass version

Wetted parts:

Spring:	1.4571
Magnets:	Hard ferrite
Housing:	Brass nickel-plated
All other wetted parts	Brass

Stainless steel version

Wetted parts:

Spring:	1.4571
Magnets:	Hard ferrite
Housing:	1.4571
All other wetted parts	1.4571

RVM/U-2 2 0009 06-09 E M

meister strömungstechnik gmbh
Im Gewerbegebiet 2
63831 Wiesen
Germany
Tel.: +49 (0) 6096 / 97 20 - 0
Fax: +49 (0) 6096 / 97 20 - 30
E-Mail: vertrieb@meister-flow.com
Internet: www.meister-flow.com

Flow Monitor

RVM/U-4

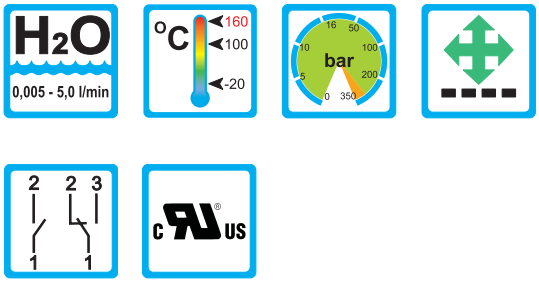

Range of Application

Operation

- Float measuring principle

Application

- Mechanical engineering
- Medicine technology
- Pharma industry
- Chemical industry
- Research and development
- Cooling systems and cooling circuits

Features

- Universal orientation
- High reliability
- High switch accuracy
- Infinitely variable switchpoint adjustment through user
- High pressure resistance
- Threaded connection, special threads on request

Installation hints

- The operating instructions for RVM/U must be observed!
- Download: www.meister-flow.com

Operating Data

Operating pressure max.	300 bar (Brass) 350 bar (Stainless Steel)
Pressure drop	0,02 - 0,2 bar
Maximum temperature	100 °C (optional 160 °C)
Accuracy	±10 % of full scale

Measuring Ranges

Type	Flow ranges for H_2O at 20 °C [1]		
	[l/min]	[gph]	[gpm]
RVM/U-4/01	0,005 - 0,06	0,08 - 0,95	
RVM/U-4/02	0,04 - 0,13	0,65 - 2,05	
RVM/U-4/06	0,1 - 0,6	1,6 - 9,5	
RVM/U-4/1	0,2 - 1,2	3,0 - 19,0	
RVM/U-4/2	0,4 - 2	6,5 - 31,5	
RVM/U-4/3	0,5 - 3	8,0 - 48,0	
RVM/U-4/5	1 - 5	16,0 - 80,0	

[1] The specified data are switch-off points, other switch ranges on request.

RVM/U-4 1 0002 06-09 E M

Technical Data

Mechanical drawing

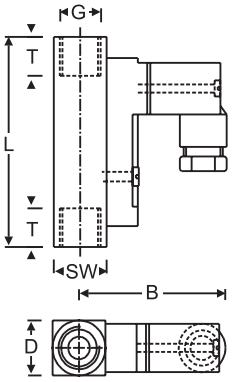

Connection diagram

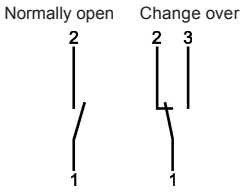

Summary of types

Type:	Overall dimensions [mm]							Weight (approx.) [g]
	SW	D	B	G	DN	T	L	
RVM/U-4/01								
RVM/U-4/02								
RVM/U-4/06								
RVM/U-4/1	17	17	47	1/4"	8	10	65	140
RVM/U-4/2								
RVM/U-4/3								
RVM/U-4/5								

Electrical Data

Change over [(2)]	200V • 1A • 20VA
Normally open	200V • 1A • 20VA
Change over M 12x1 (-20 °C - 85 °C)	125V • 1A • 20VA
Normally open M 12x1 (-20 °C - 85 °C)	125V • 1A • 20VA

Ingress Protection:

IP65: plug connection DIN 43650 Form C or plug connection M 12x1

IP67: 1 m sealed in cable

Output Signal

The contact opens / changes when the flow decreases below the set point.

Power supply

Not required (potentialfree reed contacts)

Plug types

Other plug types or cable lengths on request

[(2)] Only with plug connection

Material

Brass version

Wetted parts:

Spring:	1.4571
Magnets:	Hard ferrite
Housing:	Brass nickel-plated
All other wetted parts	Brass

Stainless steel version

Wetted parts:

Spring:	1.4571
Magnets:	Hard ferrite
Housing:	1.4571
All other wetted parts	1.4571

RVM/U-4 2 0009 06-09 E M

meister strömungstechnik gmbh
Im Gewerbegebiet 2
63831 Wiesen
Germany
Tel.: +49 (0) 6096 / 97 20 - 0
Fax: +49 (0) 6096 / 97 20 - 30
E-Mail: vertrieb@meister-flow.com
Internet: www.meister-flow.com

Flow Monitor

RVM/U-L1

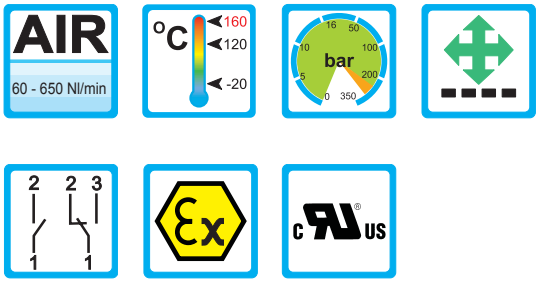

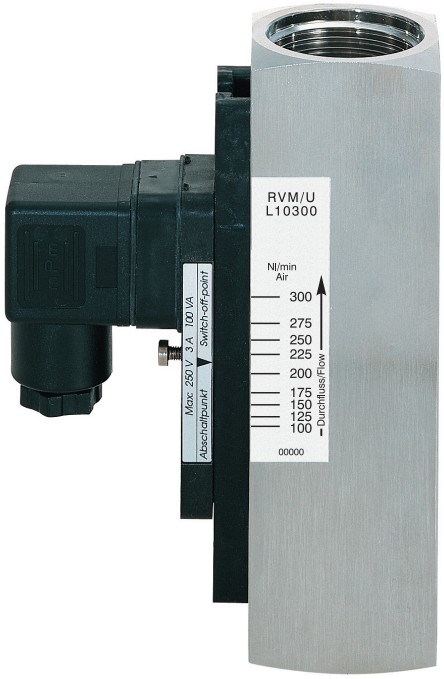

Range of Applications

Operation

- Float measuring principle

Application

- Mechanical engineering
- Medicine technology
- Pharma industry
- Chemical industry
- Research and development
- Cooling systems and cooling circuits

Features

- Universal orientation
- High reliability
- High switch accuracy
- Infinitely variable switchpoint adjustment through user
- EX-version to ATEX available
- High pressure resistance
- Threaded connection, special threads on request

Installation hints

- The operating instructions for RVM/U-L must be observed!
- Download: www.meister-flow.com

Operating Data

Operating pressure max.	250 bar (Brass) 300 bar (Stainless Steel)
Pressure drop	0,02 - 0,4 bar
Maximum temperature	120 °C (optional 160 °C)
Accuracy	±10 % of full scale

Measuring Ranges

Type	Switch range for Air at 1 bar abs. and 20 °C [1]		
	[Nl/min]	[SCFH]	[SCFM]
RVM/U-L10180	60 - 180	125,0 - 380,0	
RVM/U-L10300	100 - 300	210,0 - 635,0	
RVM/U-L10650	200 - 650		7,0 - 23,0

[1] The specified data are switch-off points, other switch ranges on request.

RVM/U-L1 1 0002 06-09 E M

Technical Data

Mechanical drawing

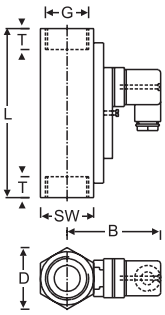

Connection diagram

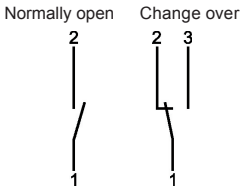

Summary of types

Type:	Overall dimensions [mm]							Weight (approx.) [g]
	SW	D	B	G	DN	T	L	
RVM/U-L10180	41	47	76	3/4"	20	21	152	1200
RVM/U-L10300				1"	25	17	130	1050
RVM/U-L10650								

Electrical Data

Change over	250V • 1,5A • 50VA [2]
Normally open	250V • 3A • 100VA
ATEX II 2 G Ex mb II T6 & ATEX II 2 D Ex tD A21 IP67 T80 °C	
ATEX II 2 G Ex mb II T5 & ATEX II 2 D Ex tD A21 IP67 T100 °C	
Change over	250V • 1A • 30VA
Normally open	250V • 2A • 60VA
Change over M 12x1 (-20 °C - 85 °C)	250V • 1,5A • 50VA [2]
Normally open M 12x1 (-20 °C - 85 °C)	250V • 3A • 100VA
Change over SPS	250V • 1A • 60VA

Ingress Protection:

IP65: plug connection DIN 43650 Form A

IP67: 1 m sealed in cable, (with EEx-version 2 m)
or plug connection M 12x1

Output Signal

The contact opens / changes when the flow decreases below the set point.

Power supply

Not required (potentialfree reed contacts)

Plug types

Other plug types or cable lengths on request

[2] Minimum load 3 VA

Material

Brass version

Wetted parts:

Spring:	1.4571
Gaskets [3]:	NBR (optional FKM, EPDM) [4]
Magnets:	Hard ferrite
Housing:	Brass nickel-plated
All other wetted parts:	Brass

Stainless steel version

Wetted parts:

Spring:	1.4571
Gaskets [3]:	FKM (optional NBR, EPDM) [4]
Magnets:	Hard ferrite
Housing:	1.4571
All other wetted parts:	1.4571

[3] Threaded connections only
[4] Other gasket materials on request

RVM/U-L1 2 0010 02-10 E M

meister strömungstechnik gmbh
Im Gewerbegebiet 2
63831 Wiesen
Germany
Tel.: +49 (0) 6096 / 97 20 - 0
Fax: +49 (0) 6096 / 97 20 - 30
E-Mail: vertrieb@meister-flow.com
Internet: www.meister-flow.com

Flow Monitor

RVM/U-L2

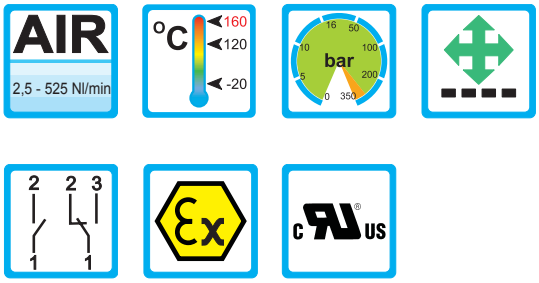

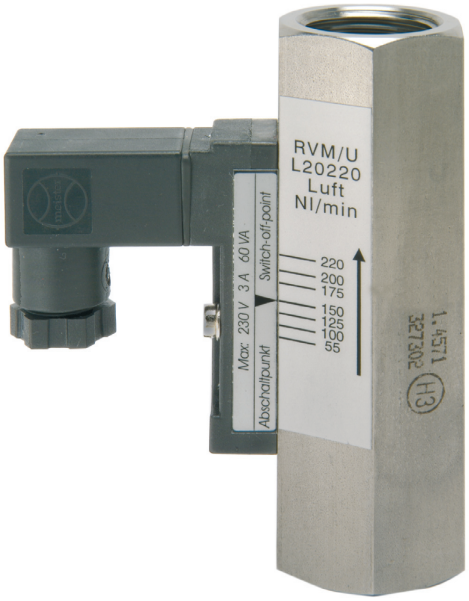

Range of Applications

Operation

- Float measuring principle

Application

- Mechanical engineering
- Medicine technology
- Pharma industry
- Chemical industry
- Research and development
- Cooling systems and cooling circuits

Features

- Universal orientation
- High reliability
- High switch accuracy
- Infinitely variable switchpoint adjustment through user
- EX-version to ATEX available
- High pressure resistance
- Threaded connection, special threads on request

Installation hints

- The operating instructions for RVM/U-L must be observed!
- Download: www.meister-flow.com

Operating Data

Operating pressure max.	300 bar (Brass) 350 bar (Stainless Steel)
Pressure drop	0,02 - 0,3 bar
Maximum temperature	120 °C (optional 160 °C)
Accuracy	±10 % of full scale

Measuring Ranges

Type	Switch range Air at 1 bar abs. and 20 °C (1)		
	[Nl/min]	[SCFH]	[SCFM]
RVM/U-L20010	2,5 - 10	5,50 - 21,0	
RVM/U-L20020	5,5 - 20	12,0 - 42,0	
RVM/U-L20030	8 - 30	17,0 - 64,0	
RVM/U-L20035	10 - 35	21,0 - 74,0	
RVM/U-2/3L	24 - 90	50,0 - 190,0	
RVM/U-L20220	55 - 220	115,0 - 465,0	
RVM/U-L20240	65 - 240	140,0 - 510,0	
RVM/U-L20300	80 - 300	170,0 - 640,0	
RVM/U-L20525	140 - 525		5,0 - 18,5

(1) The specified data are switch-off points, other switch ranges on request.

RVM/U-2 1 0002 07-09 E M

Technical Data

Mechanical drawing

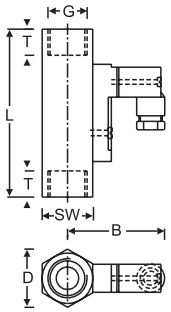

Connection diagram

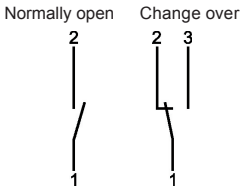

Summary of types

Type:	Overall dimensions [mm]							Weight (approx.) [g]
	SW	D	B	G	DN	T	L	
RVM/U-L20010								
RVM/U-L20020								
RVM/U-L20030								
RVM/U-L20035								
RVM/U-2/3L	27	31	52	1/2"	15	14	90	350
RVM/U-L20220								
RVM/U-L20240								
RVM/U-L20300								
RVM/U-L20525								

Electrical Data

Change over [3]	250V • 1,5A • 50VA [2]
Normally open	230V • 3A • 60VA
ATEX II 2 G Ex mb II T6 & ATEX II 2 D Ex tD A21 IP67 T80 °C	
ATEX II 2 G Ex mb II T5 & ATEX II 2 D Ex tD A21 IP67 T100 °C	
Change over	250V • 1A • 30VA
Normally open	250V • 2A • 60VA
Change over M 12x1 (-20 °C - 85 °C)	125V • 1,5A • 50VA [2]
Normally open M 12x1 (-20 °C - 85 °C)	125V • 3A • 100VA
Change over SPS [3]	250V • 1A • 60VA

Ingress Protection:

IP65: plug connection DIN 43650 Form C or plug connection M 12x1

IP67: 1 m sealed in cable, (with EEx-version 2 m)

Output Signal

The contact opens / changes when the flow decreases below the set point.

Power supply

Not required (potentialfree reed contacts)

Plug types

Other plug types or cable lengths on request

[2] Minimum load 3 VA

[3] Only with plug connection

Material

Brass version

Wetted parts:

Spring:	1.4571
Magnets:	Hard ferrite
Housing:	Brass nickel-plated
All other wetted parts:	Brass

Stainless steel version

Wetted parts:

Spring:	1.4571
Magnets:	Hard ferrite
Housing:	1.4571
All other wetted parts:	1.4571

RVM/U-L2 2 0009 07-09 E M

meister strömungstechnik gmbh
Im Gewerbegebiet 2
63831 Wiesen
Germany
Tel.: +49 (0) 6096 / 97 20 - 0
Fax: +49 (0) 6096 / 97 20 - 30
E-Mail: vertrieb@meister-flow.com
Internet: www.meister-flow.com

Flow Monitor

RVM/U-L4

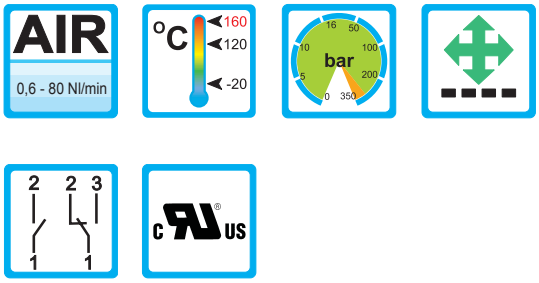

Range of Applications

Operation

- Float measuring principle

Application

- Mechanical engineering
- Medicine technology
- Pharma industry
- Chemical industry
- Research and development
- Cooling systems and cooling circuits

Features

- Universal orientation
- High reliability
- High switch accuracy
- Infinitely variable switchpoint adjustment through user
- High pressure resistance
- Threaded connection, special threads on request

Installation hints

- The operating instructions for RVM/U-L must be observed!
- Download: www.meister-flow.com

Operating Data

Operating pressure max.	300 bar (Brass) 350 bar (Stainless Steel)
Pressure drop	0,02 - 0,2 bar
Maximum temperature	120 °C (optional 160 °C)
Accuracy	±10 % of full scale

Measuring Ranges

Type	Switch range for Air at 1 bar abs. and 20 °C [1]		
	[Nl/min]	[SCFH]	[SCFM]
RVM/U-L40002	0,6 - 2,2	1,3 - 4,7	
RVM/U-L40006	1,7 - 6	3,5 - 12,7	
RVM/U-L40008	2,5 - 8	5,3 - 17,0	
RVM/U-L40012	3 - 12	6,5 - 25,5	
RVM/U-4/06L	3 - 22	6,0 - 47,0	
RVM/U-L40024	7 - 24	15,0 - 51,0	
RVM/U-L40034	12 - 34	25,0 - 72,0	
RVM/U-4/2L	16 - 56	34,0 - 119,0	
RVM/U-4/3L	20 - 80	42,0 - 170,0	

[1] The specified data are switch-off points, other switch ranges on request.

RVM/U-L 4 1 0002 07-09 E M

Technical Data

Mechanical drawing

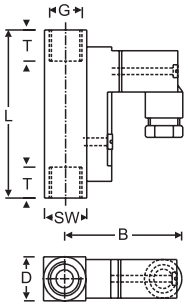

Connection diagram

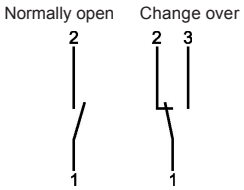

Summary of types

Type:	Overall dimensions [mm]							Weight (approx.) [g]
	SW	D	B	G	DN	T	L	
RVM/U-L40002								
RVM/U-L40006								
RVM/U-L40008								
RVM/U-L40012								
RVM/U-4/06L	17	17	47	1/4"	8	10	65	140
RVM/U-L40024								
RVM/U-L40034								
RVM/U-4/2L								
RVM/U-4/3L								

Electrical Data

Change over [2]	200V • 1A • 20VA
Normally open	200V • 1A • 20VA
Change over M 12x1 (-20 °C - 85 °C)	125V • 1A • 20VA
Normally open M 12x1 (-20 °C - 85 °C)	125V • 1A • 20VA

Ingress Protection:

IP65: plug connection DIN 43650 Form C or plug connection M 12x1

IP67: 1 m sealed in cable

Output Signal

The contact opens / changes when the flow decreases below the set point.

Power supply

Not required (potentialfree reed contacts)

Plug types

Other plug types or cable lengths on request

[2] Only with plug connection

Material

Brass version

Wetted parts:

Spring:	1.4571
Magnets:	Hard ferrite
Housing:	Brass nickel-plated
All other wetted parts:	Brass

Stainless steel version

Wetted parts:

Spring:	1.4571
Magnets:	Hard ferrite
Housing:	1.4571
All other wetted parts:	1.4571

RVM/U-L 4 2 0009 07-09 E M

meister strömungstechnik gmbh
Im Gewerbegebiet 2
63831 Wiesen
Germany
Tel.: +49 (0) 6096 / 97 20 - 0
Fax: +49 (0) 6096 / 97 20 - 30
E-Mail: vertrieb@meister-flow.com
Internet: www.meister-flow.com

Flow Monitor

RVM/U-S4

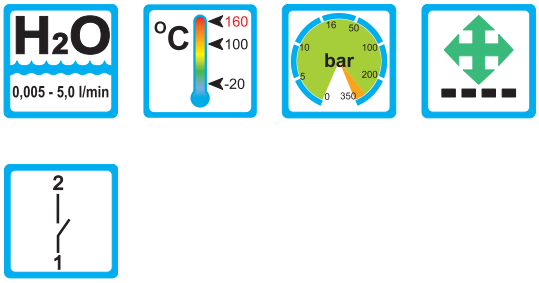

Range of Application

Operation

- Float measuring principle

Application

- Mechanical engineering
- Medicine technology
- Pharma industry
- Chemical industry
- Research and development
- Cooling systems and cooling circuits

Features

- Universal orientation
- High reliability
- High switch accuracy
- Infinitely variable switchpoint adjustment through user
- High pressure resistance
- Hose connection

Installation hints

- The operating instructions for RVM/U must be observed!
- Download: www.meister-flow.com

Operating Data

Operating pressure max.	300 bar (Brass) 350 bar (Stainless Steel)
Pressure drop	0,02 - 0,2 bar
Maximum temperature	100 °C (optional 160 °C)
Accuracy	±10 % of full scale

Measuring Ranges

Type	Flow ranges for H_2O at 20 °C [1]		
	[l/min]	[gph]	[gpm]
RVM/U-S4/01	0,005 - 0,06	0,08 - 0,95	
RVM/U-S4/02	0,04 - 0,13	0,65 - 2,05	
RVM/U-S4/06	0,1 - 0,6	1,6 - 9,5	
RVM/U-S4/1	0,2 - 1,2	3,0 - 19,0	
RVM/U-S4/2	0,4 - 2	6,5 - 31,5	
RVM/U-S4/3	0,5 - 3	8,0 - 48,0	
RVM/U-S4/5	1 - 5	16,0 - 80,0	

[1] The specified data are switch-off points, other switch ranges on request.

RVM/U-S4 1 0002 07-09 E M

Technical Data

Mechanical drawing

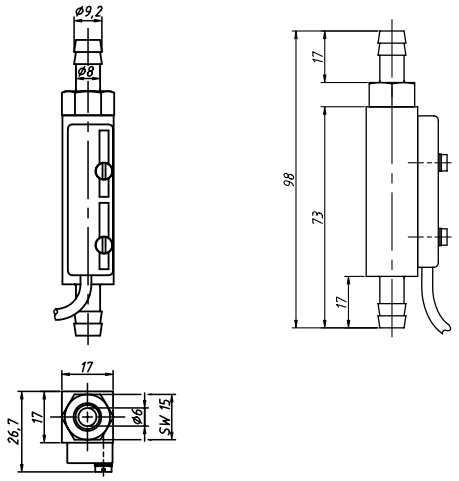

Connection diagram

Electrical Data

Normally open	200V • 1A • 20VA

Ingress protection:

IP67: 1 m sealed in cable)

Output Signal

The contact opens when the flow decreases below the set point.

Power supply

Not required (potentialfree reed contacts)

Other cable lengths on request

Summary of types

Type:	Nominal size DN	Weight (approx.) [g]
RVM/U-S4/01		
RVM/U-S4/02		
RVM/U-S4/06		
RVM/U-S4/1	8	160
RVM/U-S4/2		
RVM/U-S4/3		
RVM/U-S4/5		

Material

Brass version

Wetted parts:

Feder:	1.4571
Gaskets:	NBR (optional FKM, EPDM)
Magnets:	Hard ferrite
Housing:	Brass
All other wetted parts:	Brass

Stainless steel version

Wetted parts:

Feder:	1.4571
Gaskets:	FKM (optional NBR, EPDM)
Magnets:	Hard ferrite
Housing:	1.4571
All other wetted parts:	1.4571

RVM/U-S4 2 0002 07-09 E M

meister strömungstechnik gmbh
Im Gewerbegebiet 2
63831 Wiesen
Germany
Tel.: +49 (0) 6096 / 97 20 - 0
Fax: +49 (0) 6096 / 97 20 - 30
E-Mail: vertrieb@meister-flow.com
Internet: www.meister-flow.com

Flow Monitor

RVM/UM

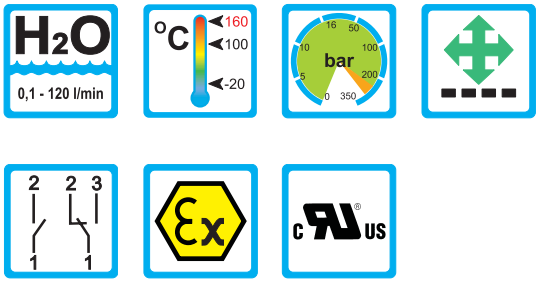

Range of Application

Operation

- Float measuring principle

Application

- Cooling systems and cooling circuits
- Mechanical engineering
- Research and development

Features

- Universal orientation
- High reliability
- High switch accuracy
- High flowrate at low switchpoint
- EX-version to ATEX available
- High pressure resistance
- Threaded connection, Special threads on request

Installation hints

- The operating instructions for RVM/UM must be observed!
- Download: www.meister-flow.com

Operating Data

Operating pressure max.	250 bar (Brass) 300 bar (Stainless Steel)
Pressure drop	See diagram on reverse side
Maximum temperature	120 °C (optional 160 °C)
Accuracy	Switch point > 3 l/min: ± 5 % of switch value Switch point ≤ 3 l/min: ± 0,1 l/min

Measuring Ranges

Type	Switch point for H_2O at 20 °C [1]		
	[l/min]	[gph]	[gpm]
RVM/UM			
Lowest Switch point:	0,1	1,6	
Highest Switch point:	30	480	

[1] The specified data are switch-off points other switch ranges on request.

RVM/UM 1 0002 07-09 E M

Technical Data

Mechanical drawing

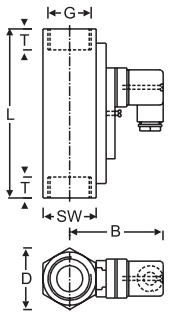

RVM/UM

Connection diagram

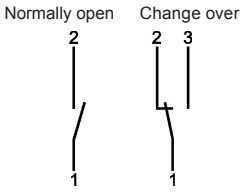

Switch points and pressure drop

Type	RVM/UM
Lowest switch point (at decreasing flow)*:	0,1 l/min
Highest switch point (at decreasing flow)*:	30 l/min

* The switch point is factory adjusted.

Please specify switch point when ordering!

The recommended maximum flow is 120 l/min

Summary of types

Type:	Einbaumaße [mm]							Gewicht
	SW	D	B	G	DN	T	L	ca. [g]
RVM/UM	41	47	72	1"	25	20	130	1000

Electrical Data

Change over	250V • 1,5A • 50VA [(2)]
Normally open	250V • 3A • 100VA
ATEX II 2 G Ex mb II T6 & ATEX II 2 D Ex tD A21 IP67 T80 °C	
ATEX II 2 G Ex mb II T5 & ATEX II 2 D Ex tD A21 IP67 T100 °C	
Change over	250V • 1A • 30VA
Normally open	250V • 2A • 60VA
Change over M 12x1 (-20 °C - 85 °C)	250V • 1,5A • 50VA [(2)]
Normally open M 12x1 (-20 °C - 85 °C)	250V • 3A • 100VA
Change over SPS	250V • 1A • 60VA

Ingress Protection:

IP65: plug connection DIN 43650 Form A

IP67: 1 m sealed in cable, (with EEx-version 2 m)
or plug connection M 12x1

Output Signal

The contact opens / changes when the flow decreases below the set point.

Power supply

Not required (potentialfree reed contacts)

Plug types

Other plug types or cable lengths on request

[(2)] Minimum load 3 VA

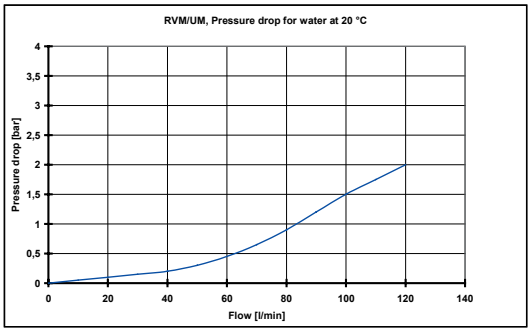

Material

Brass version

Wetted parts:

Spring:	1.4571
Magnets:	Hard ferrite
Housing:	Brass nickel-plated
All other wetted parts	Brass

Stainless steel version

Wetted parts:

Spring:	1.4571
Magnets:	Hard ferrite
Housing:	1.4571
All other wetted parts	1.4571

RVM/UM 2 0006 07-09 E M

meister strömungstechnik gmbh
Im Gewerbegebiet 2
63831 Wiesen
Germany
Tel.: +49 (0) 6096 / 97 20 - 0
Fax: +49 (0) 6096 / 97 20 - 30
E-Mail: vertrieb@meister-flow.com
Internet: www.meister-flow.com

Flow Monitor

RMU-A

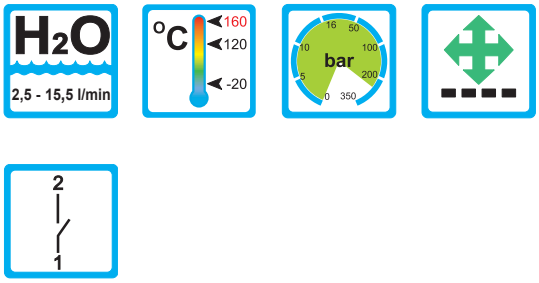

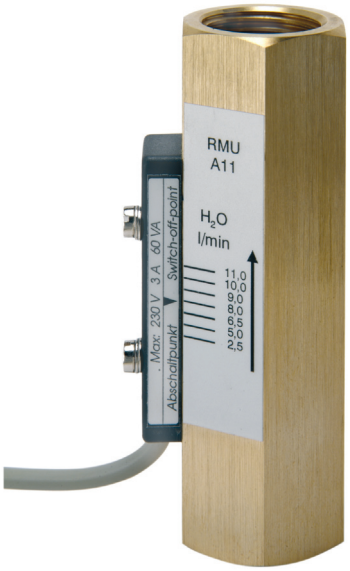

Range of Application

Operation

- Float measuring principle

Application

- Power cleaner
- Cooling systems and cooling circuits
- Mechanical engineering
- Research and development

Features

- Universal orientation
- High reliability
- Low sensiticity to dirt
- Infinitely variable switchpoint adjustment through user
- High pressure resistance
- Threaded connection, special threads on request

Installation hints

- The operating instructions for RMU must be observed!
- Download: www.meister-flow.com

Operating Data

Operating pressure max.	250 bar
Pressure drop	see summary of types
Maximum temperature	120 °C (optional 160 °C)
Accuracy	±10 % of full scale

Measuring Ranges

Type	Flow ranges for H_2O at 20 °C [1]		
	[l/min]	[gph]	[gpm]
RMU-A11	2,5 - 11,0	40,0 - 175,0	
RMU-A15	5,0 - 15,5	80,0 - 245,0	

[1] The specified data are switch-off points, other switch ranges on request.

RMU-A 1 1 0002 06-09 E M

Technical Data

Mechanical drawing

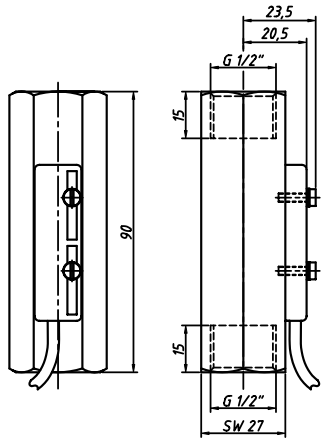

Connection diagram

Normally open

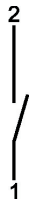

Electrical Data

Normally open	230V • 3A • 60VA

Protection type:

IP67: 1 m sealed in cable

Output signal

The contact opens, when the flow decreases below the set point.

Power supply

Not required (potentialfree reed contact)

Other cable lengths on request

Summary of types

Type:

	pressure drop [mbar]	Thread (inlet)	Thread (outlet)	Weight (approx.) [g]
RMU-A11	25 - 175	IG, G 1/2"	IG, G 1/2"	320
RMU-A15	85 - 250	IG, G 1/2"	IG, G 1/2"	320

Material

wetted parts:

Body:	Brass
Float:	Brass
Spring:	1.4571
Magnets:	Hard ferrite

RMU-A 1 2 0002 06-09 E M

meister strömungstechnik gmbh

Im Gewerbegebiet 2
63831 Wiesen
Germany

Tel.: +49 (0) 6096 / 97 20 - 0
Fax: +49 (0) 6096 / 97 20 - 30

E-Mail: vertrieb@meister-flow.com
Internet: www.meister-flow.com

Flow Monitor

RMU-B

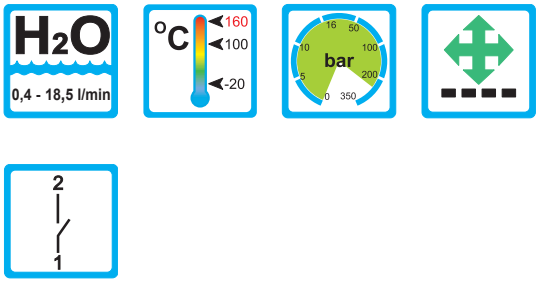

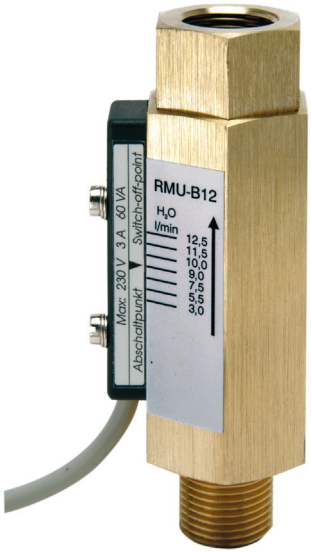

Range of Application

Operation

- Float measuring principle

Application

- Power cleaner
- Cooling systems and cooling circuits
- Mechanical engineering
- Research and development

Features

- Universal orientation
- High reliability
- Low sensiticity to dirt
- Infinitely variable switchpoint adjustment through user
- High pressure resistance
- Threaded connection, special threads on request

Installation hints

- The operating instructions for RMU must be observed!
- Download: www.meister-flow.com

Operating Data

Operating pressure max	250 bar
Pressure drop	see summary of types
Maximum temperature	100 °C (optional 160 °C)
Accuracy	±10 % of full scale

Measuring Ranges

Type	Flow ranges for H_2O at 20 °C [1]		
	[l/min]	[gph]	[gpm]
RMU-B02	0,4 - 2,1	6,5 - 33,0	
RMU-B12	3,0 - 12,5	48,0 - 198,0	
RMU-B18	8,5 - 18,5	135,0 - 295,0	

[1] The specified data are switch-off points other switch ranges on request.

RMU-B 1 1 0002 06-09 E M

Technical Data

Mechanical drawing

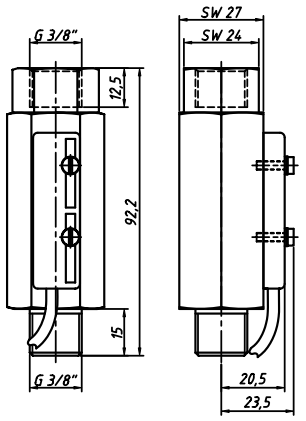

Electrical Data

Normally open 230V • 3A • 60VA

Protection type:

IP67: 1 m sealed in cable

Output signal

The contact opens, when the flow decreases below the set point.

Power supply

Not required (potentialfree reed contact)

Other cable lengths on request

Connection diagram

Normally open

Summary of types

Type:

	pressure drop [mbar]	Thread (intlet) Male	Thread (outlet) Female	Weight (approx.) [g]
RMU-B02	25 - 175	AG, G 3/8"	IG, G 3/8"	320
RMU-B12	75 - 275	AG, G 3/8"	IG, G 3/8"	320
RMU-B18	125 - 300	AG, G 3/8"	IG, G 3/8"	320

Material

wetted parts:

Body:	Brass
Float:	Brass
Spring:	1.4571
Magnets:	Hard ferrite
Gasket:	NBR*

* Other gasket materials on request

RMU-B 1 2 0002 06-09 E M

meister strömungstechnik gmbh
Im Gewerbegebiet 2
63831 Wiesen
Germany
Tel.: +49 (0) 6096 / 97 20 - 0
Fax: +49 (0) 6096 / 97 20 - 30
E-Mail: vertrieb@meister-flow.com
Internet: www.meister-flow.com

Flowmeter

SC-250

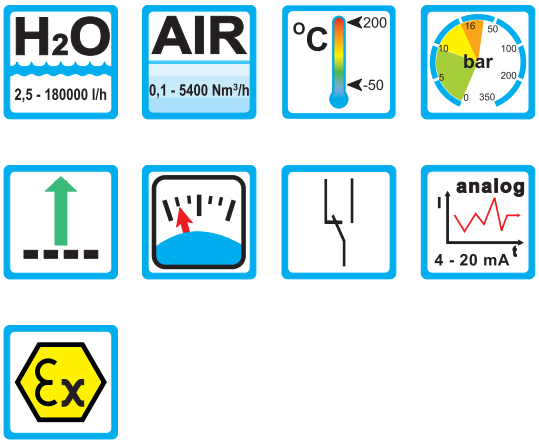

Range of Applications

Operation

- Float measuring principle

Application

- Watertreatment
- Chemical industry
- Food processing industry
- Pharma industry
- Cooling systems and cooling circuits

Features

- High reliability
- Product designated scale at no charge
- High chemical compatibility with Teflon-lining (optional)
- Flange connection special process connection on request

Installation hints

- The operating instructions for SC-250 must be observed!
- Download: www.meister-flow.com

Operating Data

Operating pressure max.:	see table on page 2	
Viscosity max.:		10 cP
Accuracy:	standard:	± 2,5 % of full scale
	optional:	± 1,6 % of full scale
Medium temperature:	Stainless Steel	- 50 °C to + 200 °C
	PVC (fully)	0 °C to + 20 °C
	PTFE (lined)	- 20 °C to + 150 °C

Measuring Ranges

Mensuring Ranges for H_2O at 20 °C:	see table on page 4
Mensuring Ranges for Air at 1 bar abs. and 20 °C:	see table on page 4

SC-250 1 0003 09-09 E M

Technical Data

Mechanical drawing

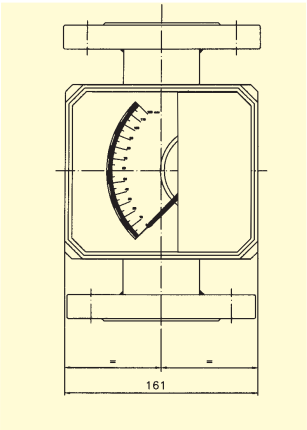

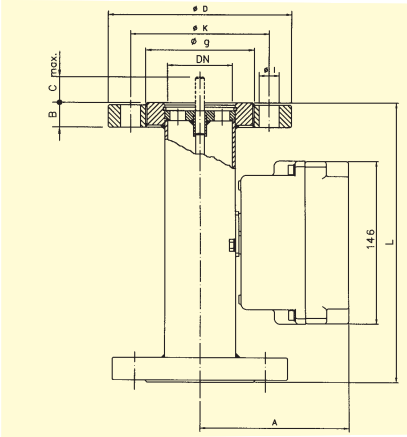

Dimensions and weights of the version according to DIN 2501

DN	D [mm]	K [mm]	g [mm]	l	B [mm]
15	95	65	45	14x4	14
25	115	85	68	14x4	16
40	150	110	88	18x4	16
50	165	125	102	18x4	18
65	185	145	122	18x4	18
80	200	160	138	18x8	20
100	220	180	158	18x8	20
125	250	210	188	18x8	22
150	285	240	212	23x8	22

DN	PN*	A [mm]	C [mm]	L [mm]	Weight [kg]
15	40	133	45	250	3,5
25	40	146	45	250	4,5
40	40	154	45	250	7,3
50	40	167	45	250	8,3
65	16	176	45	250	10
80	16	192	45	250	12
100	16	211	–	250	15
125	16	236	–	250	20
150	16	262	–	300	32

* Stainless Steel (1.4404)

Technical Data

Medium temperature:

Stainless Steel	-50 °C to +200 °C
PVC (fully)	0 °C to +50 °C
PTFE (lined)	-20 °C to +150 °C

Pressure (1.4404): see table above

Operating pressure PVC- and PP-version:

DN-15 to DN-50	PN16
DN-65 to DN-150	PN10

Operating pressure PTFE-version:

DN-15 to DN-40	PN40
DN-50 to DN-125	PN16
DN-150	PN10

Connection (standard): Flanges according to DIN 2501

on request: ANSI-, ASA-, BTS-flanges thread connection, sanitary connection to DIN 11851

Scale: Medium customised,120 mm, various units e.g.: l/h, m³/h, kg/h

Accuracy:

standard	± 2,5 % of full scale
optional	± 1,6 % of full scale

Ambient temperature:

Stainless steel (1.4404)	-20 °C to +80 °C
PVC	0 °C to +45 °C
PTFE	-20 °C to +80 °C

Viscosity max.: 10 cP

Special versions (on request):

High temperature version*	-180 °C to +400 °C
PP-version (fully)	0 °C to +80 °C

Cable entry: PG9-cable gland

Ingress protection: IP 65

Heating jacket: on request

* only in Stainless Steel (1.4404)

SC-250 2 0002 09-09 E M

Materials and float types

Mechanical drawing

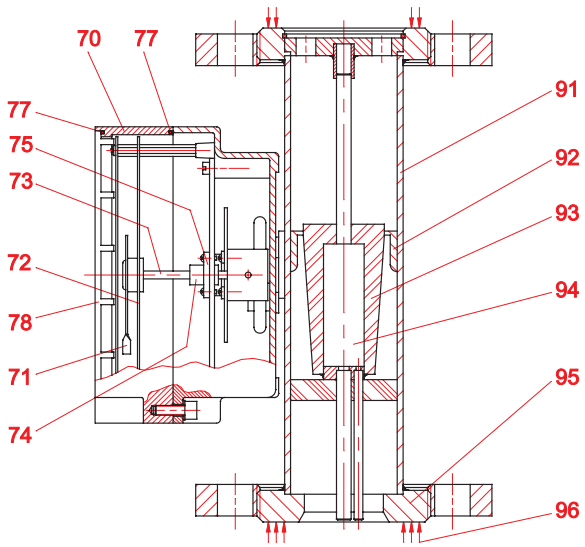

Materials measuring tube

No.	Description	Materials		
		S. Steel	PVC / PP	PTFE
91	Measuring tube	1.4404	PVC / PP	1.4404+PTFE
92	Orifice	1.4404	PVC / PP	PTFE
93	Float	1.4404	PVC / PP	PTFE
94	Magnet		Alnico	
95	Ring flange	Steel*	PVC / PP	1.4401
96	Flange - seal surface	1.4404	PVC / PP	1.4404+PTFE

* Stainless Steel on request

Materials indicator

No.	Description	Materials
70	Housing	Aluminium (polyamide conted)
71	Pointer	Aluminium
72	Scale disc	Aluminium
73	Axle	Stainless Steel 1.4401
74	Ball bearing	Stainless Steel 1.4401
75	Magnet brake	Neodimium
77	Gasket	NBR
78	Window	Polycarbonate / glass

Float types

Type FC
DN-15 to DN-80

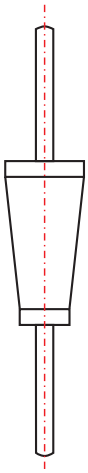

Typ FC
DN-100 to DN-150

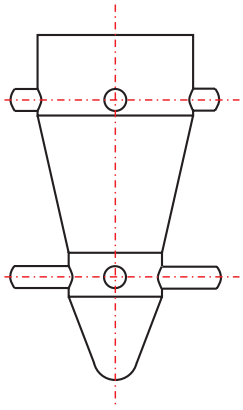

SC-250 3 0002 09-09 E M

Measuring ranges

Standard ranges for Stainless Steel float

DN	Float No.	Float in 1.4404 H_2O [l/h]	Air *1 *2 [Nm³/h]	Pressure drop [mm H_2O]
15	15025	2,5– 25	0,07 – 0,7	400
	15040	4 – 40	0,12 – 1,2	400
	15060	6 – 60	0,18 – 1,8	400
	15100	10 – 100	0,3 – 3	400
	15160	16 – 160	0,5 – 5	500
	15250	25 – 250	0,7 – 7,5	500
	15400	40 – 400	1,2 – 12	500
	15600	60 – 600	1,8 – 18	500
25	25100	100 – 1000	3 – 30	600
	25160	160 – 1600	5 – 50	700
	25250	250 – 2500	7 – 75	900
	25400	400 – 4000	12 – 120	1100
	25101	–	–	–
	25161	–	–	–
	25251	–	–	–
40	40400	400 – 4000	12 – 120	450
	40600	500 – 6300	15 – 180	550
	40800	800 – 8000	24 – 240	900

Standard ranges for PVC-float

DN	Float No.	Float in PVC *3 Air *1 [Nm³/h]	Pressure drop [mm H_2O]
15	15025	–	–
	15040	0,2 – 2	240
	15060	0,4 – 4	240
	15100	0,6 – 6	240
	15160	1 – 10	240
	15250	1,6 – 16	240
	15400	2 – 20	240
	15600	–	–
25	25100	0,6 – 6	180
	25160	1 – 10	180
	25250	1,6 – 16	180
	25400	2,5 – 25	180
	25101	4 – 40	180
	25161	6 – 60	180
	25251	9 – 96	180
40	40400	5 – 50	260
	40600	8 – 80	260
	40800	14 – 140	260

DN	Float No.	Float in 1.4404 H_2O [l/h]	Air *1 *2 [Nm³/h]	Pressure drop [mm H_2O]
50	50800	800 – 8000	24 – 240	700
	50100	1000 – 10000	30 – 300	900
	50150	1500 – 15000	45 – 450	1000
	50101	–	–	
65	65150	1500 – 15000	45 – 450	700
	65200	2000 – 20000	60 – 600	1000
80	80020	2000 – 20000	60 – 600	800
	80025	2500 – 25000	75 – 750	1000
	80030	3000 – 30000	90 – 900	1200
100	81040	4000 – 40000	120 – 1200	1000
	81050	5000 – 50000	150 – 1500	1200
	81060	6000 – 60000	180 – 1800	1500
125	82080	8000 – 80000	240 – 2400	1200
	82100	10000 – 100000	300 – 3000	1500
	82120	12000 – 120000	360 – 3600	1800
150	83150	15000 – 150000	450 – 4500	2200
	83180	18000 – 180000	500 – 5400	2200

DN	Float No.	Float in PVC *3 Air *1 [Nm³/h]	Pressure drop [mm H_2O]
50	50800	9 – 90	220
	50100	15 – 150	220
	50150	20 – 200	220
	50101	35 – 350	220
65	65150	25 – 250	220
	65200	40 – 400	220
80	80020	40 – 400	230
	80025	60 – 600	230
	80030	–	–
100	81040	60 – 600	240
	81050	100 – 1000	240
	81060	–	–
125	82080	150 – 1500	280
	82100	200 – 2000	280
	82120	–	–
150	83150	250 – 2600	320
	83180	300 – 3200	320

*1 At 1,013 bar abs., 20 °C
*2 Damper is recommanded (DN-15 to DN-80)
Measuring ranges for other media and operating conditions on request!

*1 At 1,013 bar abs., 20 °C
*3 Up to 40 °C, for higher temperatures a PTFE-float must be used.
Measuring ranges for other media and operating conditions on request!

SC-250 4 0002 09-09 E M

Adjustable micro-limitswitch type SC-AMM

Microswitch installed in the indicartor housing of the flowmeter

- SC-AMM1: 1 adjustable limitswitch
- SC-AMM2: 2 adjustable limitswitches
- Switch values: 3 (1) A / 250 V (VDE/CEE)
- Hysteresis: ±10% of endvalue
- Ambient temperature: -25 °C to +80 °C
- Mechanical lifetime: 10^7 switch operations

(Gold plated on request)

Mechanical drawing

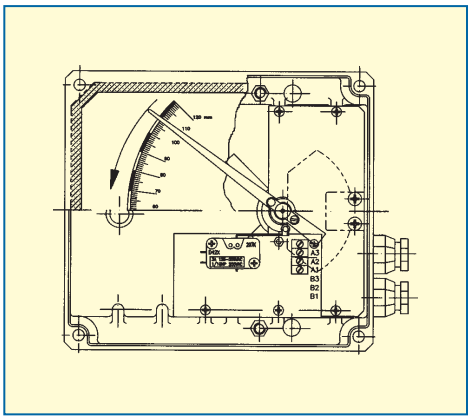

Adjustable inductive limitswitch type SC-AMD

Inductive proximityswitch, 3,5 mm, according to NAMUR DIN 19234, installed in the indicator housing of the flowmeter

- SC-AMD1...2: 1...2 adjustable limitswitches
- Power supply: 8 V DC (via amplifier)
- Temperature: -25 °C to +70 °C

Amplifier (on request)
Model NAMUR (DIN 19234) for 1 or 2 adjustable inductive switches

- Power supply: 24...230 V AC, 50 - 60 Hz
  24...250 V DC
- Input: NUMAR EEx ia IIC
- Output: 1 or 2 relays
- Load: 2...5 A / 40 V DC
- Temperature: -25 °C to +70 °C

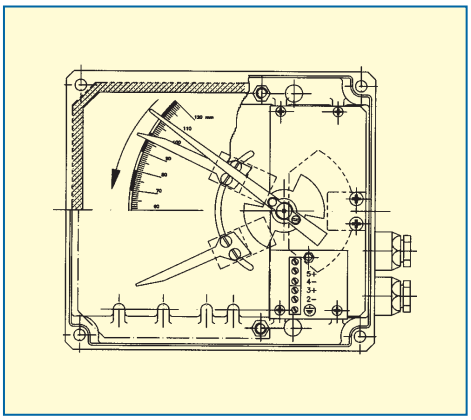

SC-250 5 0003 09-09 E M

HALLTEC IV

The HALLTEC IV is a transducer in 2-wire technique with a hall effect sensor. The hall sensor is based on the non contact sensing through the indicator mechanism.

Model:

TH4	Transducer
TH4T	Transducer + Totalizer
- Power supply:	2-wire, 12...50 V DC
- max. current:	max. 20 mA
- Analog output:	4 - 20 mA
- Accuracy:	< 0,6 % referenced to the magnet position
- Load max.:	2 kΩ at 50 V DC
- Pulse output:	MOSFET potentialfree N-channel
- I max.:	200 mA
- max. frequency:	2 Hz
- Pulse length:	approx. 250 ms
- Totalizer:	9 - digits, 4,5 mm high, with reset via potentialfree contact
- Ambient temperature.:	-5 °C to +70 °C

Mechanical drawing

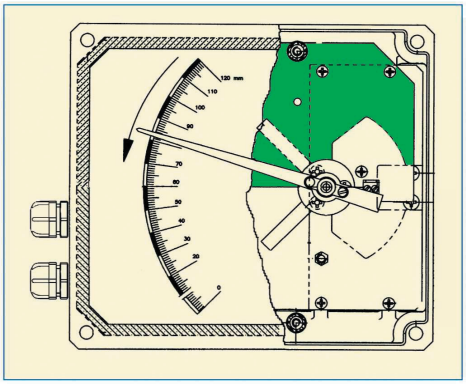

HALLTEC III (EEx ia IIC T4 ATEX)

The HALLTEC III is a transducer in 2-wire technique with a hall effect sensor. The hall sensor is based on the non contact sensing through the indicator mechanism.

Model:

TH32Ex	Transducer
TH32TEx	Transducer + Totalizer
- Power supply:	2-wire, 10...24 V DC
- max. current:	20 mA
- Analog output:	4 - 20 mA
- Accracy:	< 0,6 % referenced to the magnet position
- Load max.:	700 Ω at 24 V DC power supply
- Totalizer:	9 digits, 4,5 mm high, with rese via potentialfree contact
- Ambient temperature:	-5 °C to +40 °C

Mechanical drawing

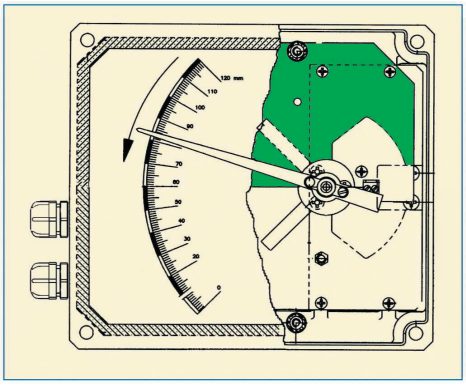

SC-250 6 0001 09-09 E M

meister strömungstechnik gmbh
Im Gewerbegebiet 2
63831 Wiesen
Germany
Tel.: +49 (0) 6096 / 97 20 - 0
Fax: +49 (0) 6096 / 97 20 - 30
E-Mail: vertrieb@meister-flow.com
Internet: www.meister-flow.com

DKG-1
DKG-2

- viscosity compensated
- sturdy construction
- special liquids possible

03

DKM/A

- viscosity compensated
- sturdy construction
- high operating pressure

03

DKME/A

- viscosity compensated
- wide measuring range
- high operating pressure

03

DKM-1
DKM-2

- viscosity compensated
- sturdy construction
- high operating pressure

03

DKME

- viscosity compensated
- wide switch range
- high operating pressure

03

Overview

Flow Monitor Flow Indicator

DKG-1

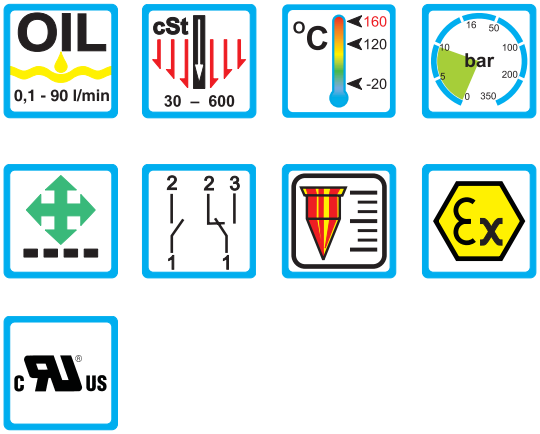

Range of Applications

Operation

- Float measuring principle

Application

- Central lubrication
- Circulation lubrication
- Transformers

Features

- Universal orientation
- Viscosity compensated
- High switch accuracy
- Infinitely variable switchpoint adjustment through user
- EX-version to ATEX available
- Scales are burned into the sight glass
- Threaded connection, special threads on request

Installation hints

- The operating instruction for DKG must be observed!
- Download: www.meister-flow.com

Operating Data

Operating pressure max.	10 bar
Pressure drop	0,02 - 0,4 bar
Viscosity range	30 cSt to 600 cSt
Maximum temperature	120 °C (optional 160 °C)
Accuracy	±10 % of full scale

Measuring Ranges

Type	Switch range for oil, density 0,9 kg/dm³ (1)		
	[l/min]	[gph]	[gpm]
DKG-1/1(2)	0,1 - 0,8	1,6 - 12,7	
DKG-1/2	0,5 - 1,5	8,0 - 24,0	
DKG-1/4	1 - 4	16,0 - 63,0	
DKG-1/8	2 - 8	32,0 - 127,0	
DKG-1/10	3 - 10	48,0 - 159,0	
DKG-1/15	5 - 15	80,0 - 240,0	
DKG-1/24	8 - 24	125,0 - 380,0	
DKG-1/30	10 - 30	160,0 - 475,0	
DKG-1/45	15 - 45	240,0 - 710,0	
DKG-1/60	20 - 60	320,0 - 950,0	
DKG-1/90	30 - 90		8,0 - 24,0

(1) The specified data are switch-off points other switch ranges on request

(2) Up to 400 cSt

DKG-1 1 0004 07-10 E M

Technical Data

Mechanical drawing

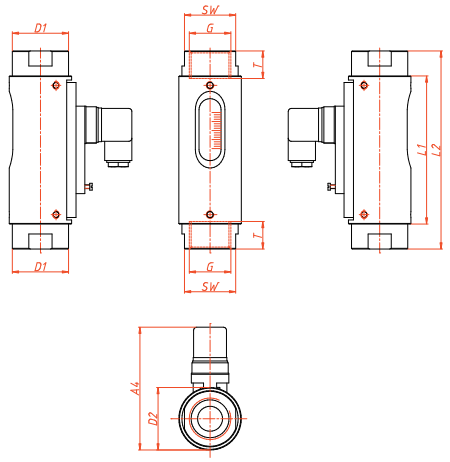

Connection diagram

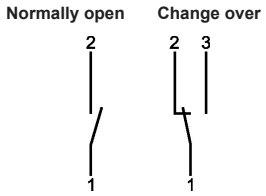

Electrical Data

Change over	250V • 1,5A • 50VA [2]
Normally open	250V • 3A • 100VA
ATEX II 2 G Ex mb II T6 & ATEX II 2 D Ex tD A21 IP67 T80 °C	
ATEX II 2 G Ex mb II T5 & ATEX II 2 D Ex tD A21 IP67 T100 °C	
Change over	250V • 1A • 30VA
Normally open	250V • 2A • 60VA
Change over M 12x1 (-20 °C - 85°C)	250V • 1,5A • 50VA [2]
Normally open M 12x1 (-20 °C - 85 °C)	250V • 3A • 100VA
Change over SPS	250V • 1A • 60VA

Ingress Protection:

IP65: plug connection DIN 43650 Form A

IP67: 1 m sealed in cable, (with EEx-version 2 m)

or plug connection M 12x1

Output signal

The contact opens / changes when the flow decreases below the set point.

Power supply

Not required (potential free reed contacts)

Plug types

Other plug types oder cable lengths on request

[2] Minimum load 3 VA

Summary of types

Type:	Overall dimensions [mm]												Weight
	SW	L1	L2	D1	G	T	D2	DN	A1	A2	A3	A4	approx. [g]
DKG-1/1	41	118,5	144,5	45	1/4"	10	50	8	-	-	-	approx. 99	850
DKG-1/2			144,5		1/2"	14		15					
DKG-1/4			138,5		3/4"	15		20					
			158,5		1"	17		25					
DKG-1/8	41	118,5	144,5	45	1/2"	14	50	15	-	-	-	approx. 99	850
DKG-1/10			138,5		3/4"	15		20					
DKG-1/15													
DKG-1/24			158,5		1"	17		25					
DKG-1/30	41	118,5	138,5	45	3/4"	15	50	20	-	-	-	approx. 99	850
DKG-1/45													
DKG-1/60			158,5		1"	17		25					
DKG-1/90													

Material

Brass version

Wetted parts:

Sight glass:	Duran 50
Spring:	1.4571
Gaskets:	FKM (optional NBR, EPDM) [3]
Magnets:	Hard ferrite

all other wetted parts: Brass nickel-plated

Non wetted parts:

Housing:	Aluminium anodized

Stainless steel version

Wetted parts:

Sight glass:	Duran 50
Spring:	1.4571
Gaskets:	FKM (optional NBR, EPDM) [3]
Magnets:	Hard ferrite

all other wetted parts: 1.4571

Non wetted parts:

Housing:	Aluminium anodized

[3] Other gasket materials on request

DKG-1 2 0009 07-10 E M

meister strömungstechnik gmbh
Im Gewerbegebiet 2
63831 Wiesen
Germany
Tel.: +49 (0) 6096 / 97 20 - 0
Fax: +49 (0) 6096 / 97 20 - 30
E-Mail: Info@meister-flow.com
Internet: www.meister-flow.com

Flow Monitor Flow Indicator

DKG-2

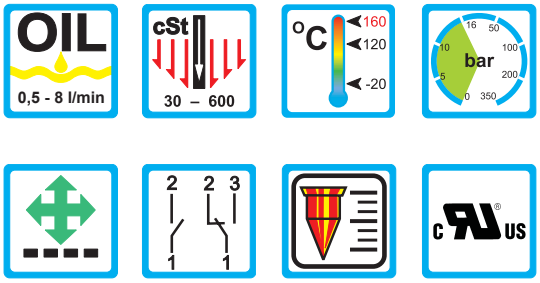

Range of Applications

Operation

- Float measuring principle

Application

- Central lubrication
- Circulation lubrication
- Transformers

Features

- Universal orientation
- Viscosity compensated
- High switch accuracy
- Infinitely variable switchpoint adjustment through user
- Scales are burned into the sight glass
- Threaded connection, special threads on request

Installation hints

- The operating instruction for DKG must be observed!
- Download: www.meister-flow.com

Operating Data

Operating pressure max.	16 bar
Pressure drop	0,02 - 0,2 bar
Viscosity range	30 cSt to 600 cSt
Maximum temperature	120 °C (optional 160 °C)
Accuracy	±10 % of full scale

Measuring Ranges

Type	Switch range for oil, density 0,9 kg/dm³ (1)		
	[l/min]	[gph]	[gpm]
DKG-2/2	0,5 - 1,7	8,0 - 27,0	
DKG-2/3	0,8 - 2,5	13,0 - 40,0	
DKG-2/4	1,3 - 4,0	21,0 - 63,0	
DKG-2/8	2,5 - 8,0	40,0 - 127,0	

(1) The specified data are switch-off points, other switch ranges on request.

DKG-2 1 0005 07-10 E M

Technical Data

Mechanical drawing

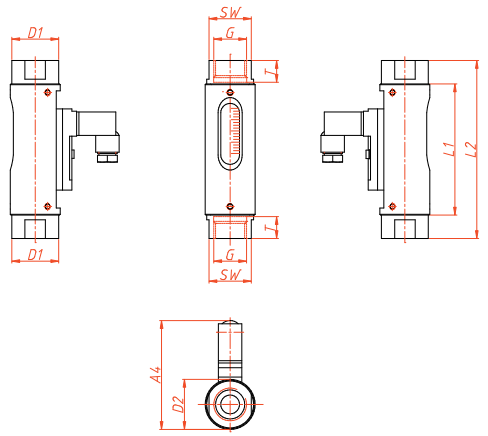

Connection diagram

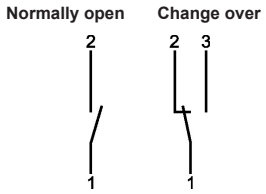

Electrical Data

Change over (3)	250V • 1,5A • 50VA (2)
Normally open	230V • 3A • 60VA
Change over M 12x1 (-20 °C - 85 °C)	125V • 1,5A • 50VA (2)
Normally open M 12x1 (-20 °C - 85 °C)	125V • 3A • 100VA
Change over SPS (3)	250V • 1A • 60VA

Ingress Protection:

IP65: plug connection DIN 43650 Form C or plug connection M 12x1

IP67: 1 m sealed in cable, (with EEx-version 2 m)

Output signal

The contact opens / changes when the flow decreases below the set point.

Power supply

Not required (potential free reed contacts)

Plug types

Other plug types oder cable lengths on request

(2) Minimum load 3 VA

(3) Only with plug connection

Summary of types

Type:	Overall dimensions [mm]												Weight
	SW	L1	L2	D1	G	T	D2	DN	A1	A2	A3	A4	approx. [g]
DKG-2/2													
DKG-2/3	27	84	114	30	1/2"	14	32	15	-	-	-	approx. 70	300
DKG-2/4													
DKG-2/8													

Material

Brass version

Wetted parts:

Sight glass:	Duran 50
Spring:	1.4571
Gaskets:	FKM (optional NBR, EPDM) (4)
Magnets:	Hard ferrite

all other wetted parts: Brass nickel-plated

Non wetted parts:

Housing:	Aluminium anodized

Stainless steel version

Wetted parts:

Sight glass:	Duran 50
Spring:	1.4571
Gaskets:	FKM (optional NBR, EPDM) (4)
Magnets:	Hard ferrite

all other wetted parts: 1.4571

Non wetted parts:

Housing:	Aluminium anodized

(4) Other gasket materials on request

DKG-2 2 0010 07-10 E M

meister strömungstechnik gmbh
Im Gewerbegebiet 2
63831 Wiesen
Germany
Tel.: +49 (0) 6096 / 97 20 - 0
Fax: +49 (0) 6096 / 97 20 - 30
E-Mail: vertrieb@meister-flow.com
Internet: www.meister-flow.com

Flow Monitor Flow Indicator

DKM/A

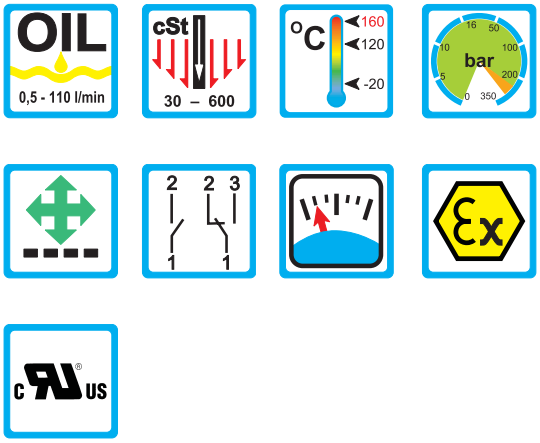

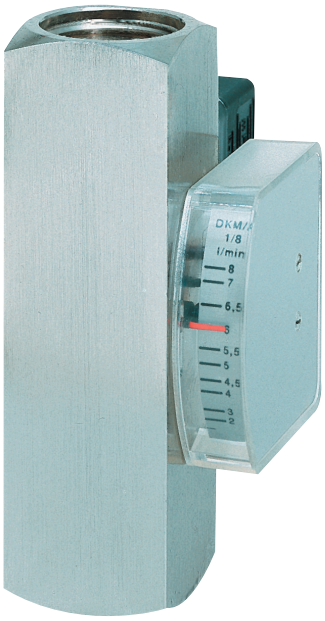

Range of Application

Operation

- Float measuring principle

Application

- Central lubrication
- Circulation lubrication
- Transformers

Features

- Universal orientation
- High reliability
- Viscosity compensated
- High switch accuracy
- Infinitely variable switchpoint adjustment through user
- EX-version to ATEX available
- Threaded connection, special threads on request
- High pressure resistance

Installation hints

- The operating instruction for DKM/A must be observed!
- Download: www.meister-flow.com

Operating Data

Operating pressure max.	250 bar (MS) / 300 bar (VA)
Pressure drop	0,02 - 0,4 bar
Viscosity range	30 cSt to 600 cSt
Maximum temperature	120 °C (optional 160 °C)
Accuracy	±10 % of full scale

Measuring Ranges

Type	Switch range for oil, density 0,9 kg/dm³ (1)		
	[l/min]	[gph]	[gpm]
DKM/A-1/2	0,5 - 1,5	8,0 - 24,0	
DKM/A-1/4	1 - 4	16,0 - 63,0	
DKM/A-1/8	2 - 8	32,0 - 127,0	
DKM/A-1/10	3 - 10	48,0 - 160,0	
DKM/A-1/15	5 - 15	80,0 - 240,0	
DKM/A-1/24	8 - 24	125,0 - 380,0	
DKM/A-1/30	10 - 30	160,0 - 480,0	
DKM/A-1/45	15 - 45	240,0 - 710,0	
DKM/A-1/60	20 - 60	320,0 - 950,0	
DKM/A-1/90	30 - 90		8,0 - 24,0
DKM/A-1/110	35 - 110		9,5 - 29,0

(1) The specified data are switch-off points, other switch ranges on request.

DKM/A 1 0003 07-10 E M

Technical Data

Mechanical drawing

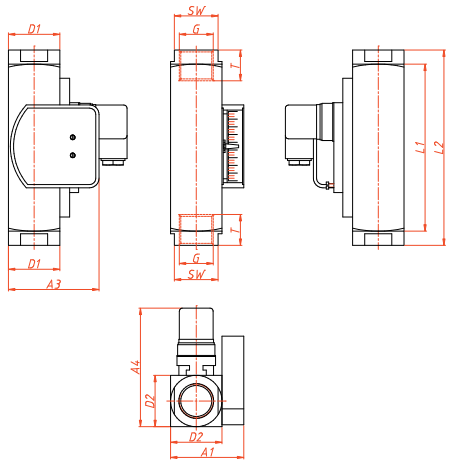

Connection diagram

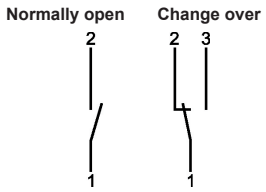

Electrical Data

Change over	250V • 1,5A • 50VA [2]
Normally open	250V • 3A • 100VA
ATEX II 2 G Ex mb II T6 & ATEX II 2 D Ex tD A21 IP67 T80 °C	
ATEX II 2 G Ex mb II T5 & ATEX II 2 D Ex tD A21 IP67 T100 °C	
Change over	250V • 1A • 30VA
Normally open	250V • 2A • 60VA
Change over M 12x1 (-20 °C - 85°C)	250V • 1,5A • 50VA [2]
Normally open M 12x1 (-20 °C - 85 °C)	250V • 3A • 100VA
Change over SPS	250V • 1A • 60VA

Ingress Protection:

IP65: plug connection DIN 43650 Form A

IP67: 1 m sealed in cable, (with EEx-version 2 m)
or plug connection M 12x1

Output signal

The contact opens / changes when the flow decreases below the set point.

Power supply

Not required (potentialfree reed contacts)

Plug types

Other plug types or cable lengths on request

[2] Minimum load 3 VA

Summary of types

Type:	Overall dimensions [mm]												Weight
	SW	L1	L2	D1	G	T	D2	DN	A1	A2	A3	A4	approx. [g]
DKM/A-1/2	34	130	152	40	1/4"	10	40 / 40	8	57	-	70,5	approx. 93	1590
	34		152		1/2"	14		15					1515
	34		152		3/4"	15		20					1430
DKM/A-1/4	40		130		1"	17		25					1250
DKM/A-1/8	34	130	152	40	1/2"	14	40 / 40	15	57	-	70,5	approx. 93	1515
DKM/A-1/10	34		152		3/4"	15		20					1430
DKM/A-1/15	40		130		1"	17		25					1250
DKM/A-1/24													
DKM/A-1/30	34	130	152	40	3/4"	15	40 / 40	20	57	-	70,5	approx. 93	1430
DKM/A-1/45	40		130		1"	17		25					1250
DKM/A-1/60													
DKM/A-1/90	40	130	130	40	1"	17	40 / 40	25	57	-	70,5	approx. 93	1250
DKM/A-1/110													

Material

Brass version

Wetted parts:

Spring:	1.4571
Gaskets:	FKM (optional NBR, EPDM) [3]
Magnets:	Hard ferrite
Housing:	Brass nickel-plated

all other wetted parts: Brass

Stainless steel version

Wetted parts:

Spring:	1.4571
Gaskets:	FKM (optional NBR, EPDM) [3]
Magnets:	Hard ferrite
Housing:	1.4571

all other wetted parts: 1.4571

[3] Other gasket materials on request

DKM/A 2 0009 07-10 E M

meister strömungstechnik gmbh
Im Gewerbegebiet 2
63831 Wiesen
Germany
Tel.: +49 (0) 6096 / 97 20 - 0
Fax: +49 (0) 6096 / 97 20 - 30
E-Mail: vertrieb@meister-flow.com
Internet: www.meister-flow.com

Flow Monitor Flow Indicator

DKME/A

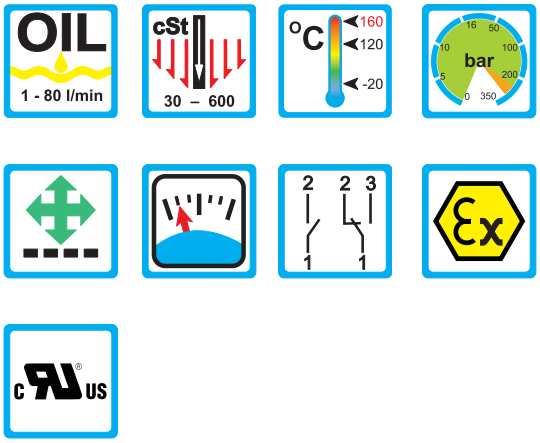

Range of Application

Operation

- Float measuring principle

Application

- Central lubrication
- Circulation lubrication
- Transformers

Features

- Universal orientation
- High reliability
- Viscosity compensated
- High switch accuracy
- Wide switch range
- Infinitely variable switchpoint adjustment through user
- EX-version to ATEX available
- High pressure resistance

Installation hints

- The operating instruction for DKME/A must be observed!
- Download: www.meister-flow.com

Operating Data

Operating pressure max.	250 bar (Brass) 300 bar (Stainless steel)
Pressure drop	0,02 - 0,4 bar
Viscosity range	30 cSt to 600 cSt
Maximum temperature	120 °C (optional 160 °C)
Accuracy	±10 % of full scale

Measuring Ranges

Type	Switch range for oil, density 0,9 kg/dm³ (1)		
	[l/min]	[gph]	[gpm]
DKME/A-1/20	1 - 20	15,0 - 320,0	
DKME/A-1/40	4 - 40	60,0 - 630,0	
DKME/A-1/50	5 - 50	80,0 - 790,0	
DKME/A-1/60	8 - 60	130,0 - 950,0	
DKME/A-1/70	12 - 70		3,2 - 18,5
DKME/A-1/80	15 - 80		4,0 - 21,1

(1) The specified data are switch-off points, other switch ranges on request.

DKME/A 1 0003 07-10 E M

Technical Data

Mechanical drawing

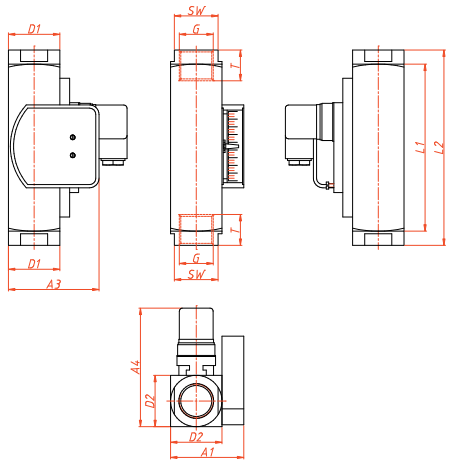

Connection diagram

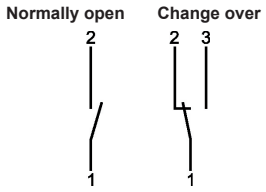

Electrical Data

Change over	250V • 1,5A • 50VA [2]
Normally open	250V • 3A • 100VA
ATEX II 2 G Ex mb II T6 & ATEX II 2 D Ex tD A21 IP67 T80 °C	
ATEX II 2 G Ex mb II T5 & ATEX II 2 D Ex tD A21 IP67 T100 °C	
Change over	250V • 1A • 30VA
Normally open	250V • 2A • 60VA
Change over M 12x1 (-20 °C - 85 °C)	250V • 1,5A • 50VA [2]
Normally open M 12x1 (-20 °C - 85 °C)	250V • 3A • 100VA
Change over SPS	250V • 1A • 60VA

Ingress Protection:

IP65: plug connection DIN 43650 Form A

IP67: 1 m sealed in cable, (with EEx-version 2 m)
or plug connection M 12x1

Output signal

The contact opens / changes when the decreases below the set point.

Power supply

Not required (potentialfree reed contacts)

Plug types

Other plug types oder cable lengths on request

[2] Minimum load 3 VA

Summary of types

Type:	Overall dimensions [mm]												Weight
	SW	L1	L2	D1	G	T	D2	DN	A1	A2	A3	A4	approx. [g]
DKME/A-1/20	34	130	152	40	1/2"	14	40 / 40	15	57	-	70,5	approx. 93	1510
DKME/A-1/40	34		152		3/4"	15		20					1425
	40		130		1"	17		25					1245
DKME/A-1/50	34	130	152	40	3/4"	15	40 / 40	20	57	-	70,5	approx. 93	1425
DKME/A-1/60	40		130		1"	17		25					1245
DKME/A-1/70	40	130	130	40	1"	17	40 / 40	25	57	-	70,5	approx. 93	1245
DKME/A-1/80													

Material

Brass version
Wetted parts:

Spring:	1.4571
Gaskets:	FKM (optional NBR, EPDM) [3]
Magnets:	Hard ferrite
Housing:	Brass nickel-plated

all other wetted parts: Brass

Stainless steel version
Wetted parts:

Spring:	1.4571
Gaskets:	FKM (optional NBR, EPDM) [3]
Magnets:	Hard ferrite
Housing:	1.4571

all other wetted parts: 1.4571

[3] Other gasket materials on request

DKME/A 2 0006 07-10 E M

meister strömungstechnik gmbh
Im Gewerbegebiet 2
63831 Wiesen
Germany
Tel.: +49 (0) 6096 / 97 20 - 0
Fax: +49 (0) 6096 / 97 20 - 30
E-Mail: vertrieb@meister-flow.com
Internet: www.meister-flow.com

Flow Monitor

DKM-1

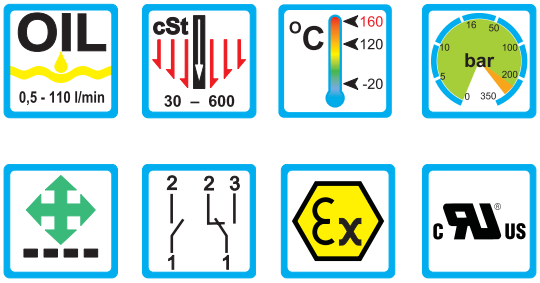

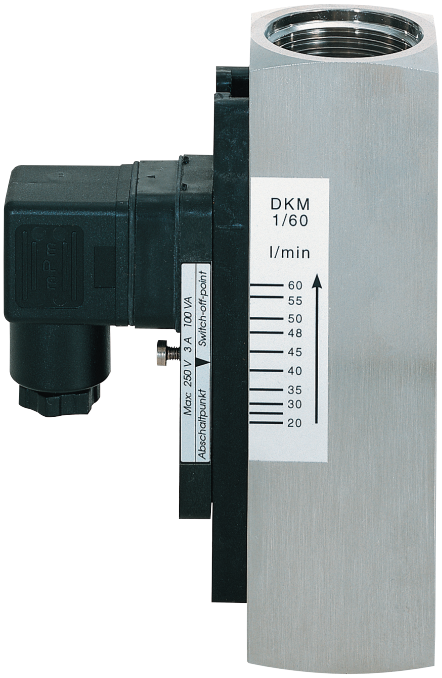

Range of Application

Operation

- Float measuring principle

Application

- Central lubrication
- Circulation lubrication
- Transformers

Features

- universal orientation
- high reliability
- viscosity compensated
- high switch accuracy
- infinitely variable switchpoint adjustment through user
- EX-version to ATEX available
- Threaded connection, Special threads on request
- high pressure resistance

Installation hints

- The operating instruction for DKM must be observed!
- Download: www.meister-flow.com

Operating Data

Operating pressure max.	250 bar (MS) / 300 bar (VA)
Pressure drop	0,02 - 0,4 bar
Viscosity range	30 cSt to 600 cSt
Maximum temperature	120 °C (optional 160 °C)
Accuracy	±10 % of full scale

Measuring Ranges

Type	Switch range for oil, density 0,9 kg/dm³ (1)		
	[l/min]	[gph]	[gpm]
DKM-1/2	0,5 - 1,5	8,0 - 24,0	
DKM-1/4	1 - 4	16,0 - 63,0	
DKM-1/8	2 - 8	32,0 - 127,0	
DKM-1/10	3 - 10	48,0 - 160,0	
DKM-1/15	5 - 15	80,0 - 240,0	
DKM-1/24	8 - 24	125,0 - 380,0	
DKM-1/30	10 - 30	160,0 - 480,0	
DKM-1/45	15 - 45	240,0 - 710,0	
DKM-1/60	20 - 60	320,0 - 950,0	
DKM-1/90	30 - 90		8,0 - 24,0
DKM-1/110	35 - 110		9,5 - 29,0

(1) The specified data are switch-off points, other switch ranges on request

DKM-1 1 0002 06-09 E M

Technical Data

Mechanical drawing

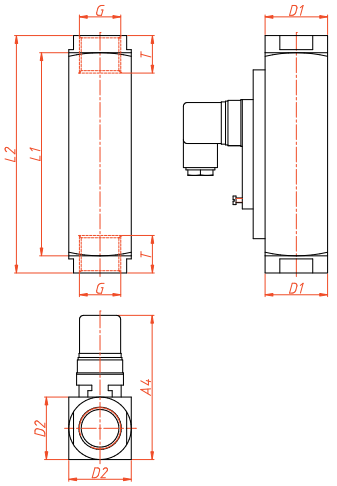

Connection diagram

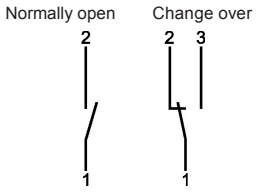

Electrical Data

Change over	250V • 1,5A • 50VA [2]
Normally open	250V • 3A • 100VA
ATEX II 2 G Ex mb II T6 & ATEX II 2 D Ex tD A21 IP67 T80 °C	
ATEX II 2 G Ex mb II T5 & ATEX II 2 D Ex tD A21 IP67 T100 °C	
Change over	250V • 1A • 30VA
Normally open	250V • 2A • 60VA
Change over M 12x1 (-20 °C - 85 °C)	250V • 1,5A • 50VA [2]
Normally open M 12x1 (-20 °C - 85 °C)	250V • 3A • 100VA
Change over SPS	250V • 1A • 60VA

Ingress Protection:

IP65: plug connection DIN 43650 Form A

IP67: 1 m sealed in cable, (with EEx-version 2 m)

or plug connection M 12x1

Output signal

The contact opens / changes when the flow decreases below the set point.

Power supply

Not required (potentialfree reed contacts)

Plug types

Other plug types or cable lengths on request

[2] Minimum load 3 VA

Summary of types

Type:	Overall dimensions [mm]												Weight
	SW	L1	L2	D1	G	T	D2	DN	A1	A2	A3	A4	approx. [g]
DKM-1/2	34	130	152	40	1/4"	10	40 / 40	8	-	-	-	approx. 93	1500
	34		152		1/2"	14		15					1425
	34		152		3/4"	15		20					1340
DKM-1/4	40		130		1"	17		25					1160
DKM-1/8	34	130	152	40	1/2"	14	40 / 40	15	-	-	-	approx. 93	1425
DKM-1/10	34		152		3/4"	15		20					1340
DKM-1/15	40		130		1"	17		25					1160
DKM-1/24													
DKM-1/30	34	130	152	40	3/4"	15	40 / 40	20	-	-	-	approx. 93	1340
DKM-1/45	40		130		1"	17		25					1160
DKM-1/60													
DKM-1/90	40	130	130	40	1"	17	40 / 40	25	-	-	-	approx. 93	1160
DKM-1/110													

Material

Brass version

Wetted parts:

Spring:	1.4571
Gaskets:	FKM (optional NBR, EPDM) [3]
Magnets:	Hard ferrite
Housing:	Brass nickel-plated

all other wetted parts: Brass

Stainless steel version

Wetted parts:

Spring:	1.4571
Gaskets:	FKM (optional NBR, EPDM) [3]
Magnets:	Hard ferrite
Housing:	1.4571

all other wetted parts: 1.4571

[3] Other gasket materials on request

DKM-1 2 0009 07-10 E M

meister strömungstechnik gmbh
Im Gewerbegebiet 2
63831 Wiesen
Germany
Tel.: +49 (0) 6096 / 97 20 - 0
Fax: +49 (0) 6096 / 97 20 - 30
E-Mail: vertrieb@meister-flow.com
Internet: www.meister-flow.com

Flow Monitor

DKM-2

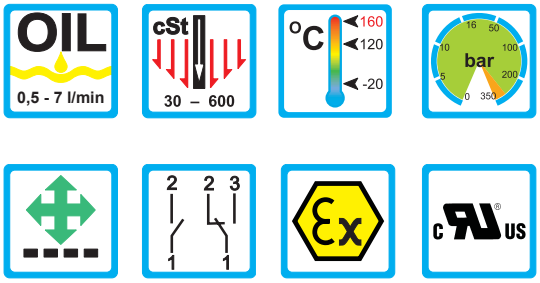

Range of Application

Operation

- Float measuring principle

Application

- Central lubrication
- Circulation lubrication
- Transformers

Features

- Universal orientation
- High reliability
- Viscosity compensated
- High switch accuracy
- Infinitely variable switchpoint adjustment through user
- EX-version to ATEX available
- Threaded connection, special threads on request
- High pressure resistance

Installation hints

- The operating instruction for DKM must be observed!
- Download: www.meister-flow.com

Operating Data

Operating pressure max	300 bar (MS) / 350 bar (VA)
Pressure drop	0,02 - 0,2 bar
Viscosity range	30 cSt to 600 cSt
Maximum temperature	120 °C (optional 160 °C)
Accuracy	±10 % of full scale

Measuring Ranges

Type	Switch range for oil, density 0,9 kg/dm³ (1)		
	[l/min]	[gph]	[gpm]
DKM-2/2	0,5 - 1,6	8,0 - 25,5	
DKM-2/3	0,8 - 3	13,0 - 48,0	
DKM-2/7	2 - 7	32,0 - 111,0	

(1) The specified data are switch-off points, other switch ranges on request

DKM-2 1 0003 07-10 E M

Technical Data

Mechanical drawing

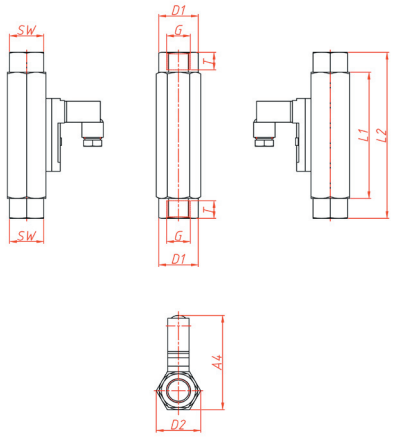

Connection diagram

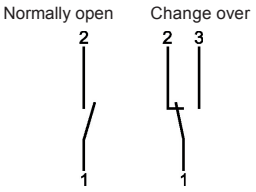

Electrical Data

Change over [3]	250V • 1,5A • 50VA [2]
Normally open	230V • 3A • 60VA
ATEX II 2 G Ex mb II T6 & ATEX II 2 D Ex tD A21 IP67 T80 °C	
ATEX II 2 G Ex mb II T5 & ATEX II 2 D Ex tD A21 IP67 T100 °C	
Change over	250V • 1A • 30VA
Normally open	250V • 2A • 60VA
Change over M 12x1 (-20 °C - 85 °C)	125V • 1,5A • 50VA [2]
Normally open M 12x1 (-20 °C - 85 °C)	125V • 3A • 60VA
Change over SPS [3]	250V • 1A • 60VA

Ingress Protection:

IP65: plug connection DIN 43650 Form C or plug connection M 12x1

IP67: 1 m sealed in cable, (with EEx-version 2 m)

Output signal

The contact opens / changes when the flow decreases below the set point.

Power supply

Not required (potential free reed contacts)

Plug types

Other plug types oder cable lengths on request

[2] Minimum load 3 VA

[3] Only with plug connection

Summary of types

Type:	Overall dimensions [mm]												Weight
	SW	L1	L2	D1	G	T	D2	DN	A1	A2	A3	A4	approx. [g]
DKM-2/2	24	90	98	27,5	1/4"	10	31	8	-	-	-	67,6	400
	24	90	118,6	27,5	3/8"	11	31	10				67,6	450
	27	90			1/2"	14	31	15				67,6	350
DKM-2/3	27	90			1/2"	14	31	15	-	-	-	67,6	350
DKM-2/7													

Material

Brass version

Wetted parts:

Spring:	1.4571
Gaskets:	FPM (optional NBR, EPDM) [4]
Magnets:	Hard ferrite
Housing:	Brass nickel-plated

all other wetted parts: Brass

Stainless steel version

Wetted parts:

Spring:	1.4571
Gaskets:	FPM (optional NBR, EPDM) [4]
Magnets:	Hard ferrite
Housing:	1.4571

all other wetted parts: 1.4571

[4] Other gasket materials on request.

DKM-2 2 0009 07-10 E M

meister strömungstechnik gmbh
Im Gewerbegebiet 2
63831 Wiesen
Germany
Tel.: +49 (0) 6096 / 97 20 - 0
Fax: +49 (0) 6096 / 97 20 - 30
E-Mail: vertrieb@meister-flow.com
Internet: www.meister-flow.com

Flow Monitor

DKME

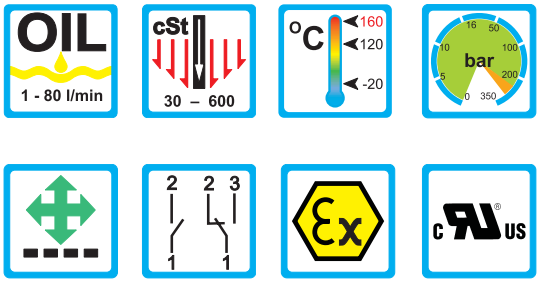

Range of Application

Operation

- Float measuring principle

Application

- Central lubrication
- Circulation lubrication
- Transformers

Features

- Universal orientation
- High reliability
- Viscosity compensated
- High switch accuracy
- Wide switch range
- Infinitely variable switchpoint, adjustment through user
- EX-version to ATEX available
- High pressure resistance

Installation hints

- The operating instruction for DKME must be observed!
- Download: www.meister-flow.com

Operating Data

Operating pressure max.	250 bar (Brass) 300 bar (Stainless steel)
Pressure drop	0,02 - 0,4 bar
Viscosity range	30 cSt to 600 cSt
Maximum temperature	120 °C (optional 160 °C)
Accuracy	±10 % of full scale

Measuring Ranges

Type	Switch range for oil, density 0,9 kg/dm³ (1)		
	[l/min]	[gph]	[gpm]
DKME-1/20	1 - 20	15,0 - 320,0	
DKME-1/40	4 - 40	60,0 - 630,0	
DKME-1/50	5 - 50	80,0 - 790,0	
DKME-1/60	8 - 60	130,0 - 950,0	
DKME-1/70	12 - 70		3,2 - 18,5
DKME-1/80	15 - 80		4,0 - 21,1

(1) The specified data are switch-off points, other switch ranges on request.

DKME 1 0004 07-10 E M

Technical Data

Mechanical drawing

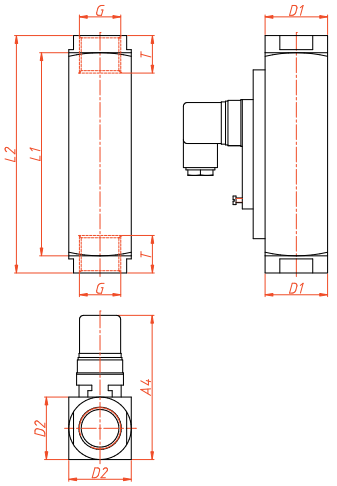

Connection diagram

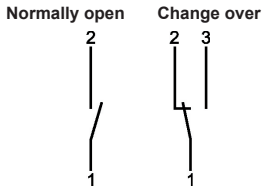

Electrical Data

Change over	250V • 1,5A • 50VA [2]
Normally open	250V • 3A • 100VA
ATEX II 2 G Ex mb II T6 & ATEX II 2 D Ex tD A21 IP67 T80 °C	
ATEX II 2 G Ex mb II T5 & ATEX II 2 D Ex tD A21 IP67 T100 °C	
Change over	250V • 1A • 30VA
Normally open	250V • 2A • 60VA
Change over M 12x1 (-20 °C - 85 °C)	250V • 1,5A • 50VA [2]
Normally open M 12x1 (-20 °C - 85 °C)	250V • 3A • 100VA
Change over SPS	250V • 1A • 60VA

Ingress Protection:

IP65: plug connection DIN 43650 Form A

IP67: 1 m sealed in cable, (with EEx-version 2 m)
or plug connection M 12x1

Output signal

The contact opens / changes when the flow decreases below the set point.

Power supply

Not required (potentialfree reed contacts)

Plug types

Other plug types oder cable lengths on request

[2] Minimum load 3 VA

Summary of types

Type:	Overall dimensions [mm]												Weight
	SW	L1	L2	D1	G	T	D2	DN	A1	A2	A3	A4	approx. [g]
DKME-1/20	34	130	152	40	1/2"	14	40 / 40	15	-	-	-	approx. 93	1425
	34		152		3/4"	15		20					1340
DKME-1/40	40		130		1"	17		25					1160
DKME-1/50	34	130	152	40	3/4"	15	40 / 40	20	-	-	-	approx. 93	1340
DKME-1/60	40		130		1"	17		25					1160
DKME-1/70	40	130	130	40	1"	17	40 / 40	25	-	-	-	approx. 93	1160
DKME-1/80													

Material

Brass version
Wetted parts:

Spring:	1.4571
Gaskets:	FKM (optional NBR, EPDM) [3]
Magnets:	Hard ferrite
Housing:	Brass nickel-plated

all other wetted parts: Brass

Stainless steel version
Wetted parts:

Spring:	1.4571
Gaskets:	FKM (optional NBR, EPDM) [3]
Magnets:	Hard ferrite
Housing:	1.4571

all other wetted parts: 1.4571

[3] Other gasket materials on request

DKME 2 0007 07-10 E M

meister strömungstechnik gmbh
Im Gewerbegebiet 2
63831 Wiesen
Germany
Tel.: +49 (0) 6096 / 97 20 - 0
Fax: +49 (0) 6096 / 97 20 - 30
E-Mail: vertrieb@meister-flow.com
Internet: www.meister-flow.com

KM 35

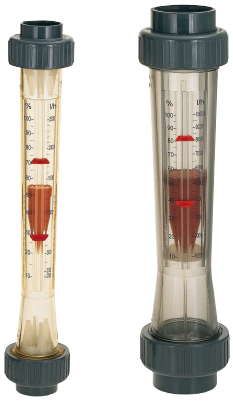

- high accuracy
- good readability
- PVC-U / PA / PSU / PVDF

KM 16, KM 17, KM 18, KM 20

- high accuracy
- good readability
- PVC-U / PA / PSU / PVDF

Synthetic VA Flowmeters

KM 35

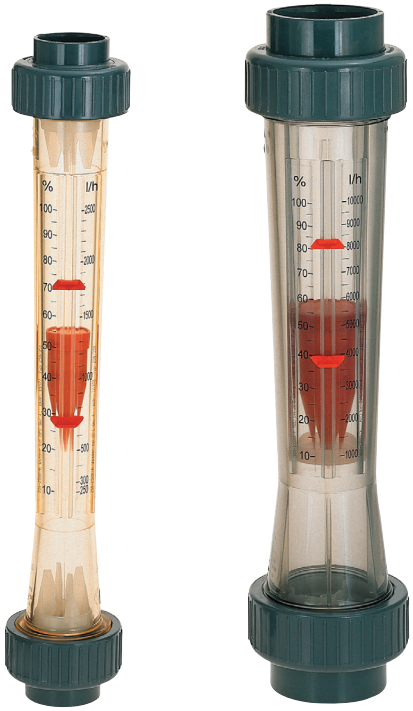

Operation

The flowmeters type KM 35 operate with the float measuring principle

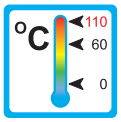

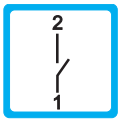

Application

The flowmeters type KM 35 are used for measuring volumeflow of liquid and gaseous media.

Areas of application:

– Coolingsystems and cooling-circuits

– Mechanical Engineering e.g. Weldingmachinery, Laserplants

– Medicine technology

– Pharmaceutical industry

– Research and development

Features

The model proves itself through reliable function and easy handling:

– high accuracy (Accuracy class 4)

– easy to read

– Good suitability for special media by choice between 4 different materials

– Scales can be exchanged subsequently, Special scales on request

– Glue connections or threaded connections

Installation hints

The instrument must be installed vertically in the fow circuit.
The flowdirection is from bottom to top.

The flowmeter must not be used as a supporting part in a pipeconstruction!

The medium must not contain any solid particles!

KM35 1 0001 07-04 E M

Technical Data

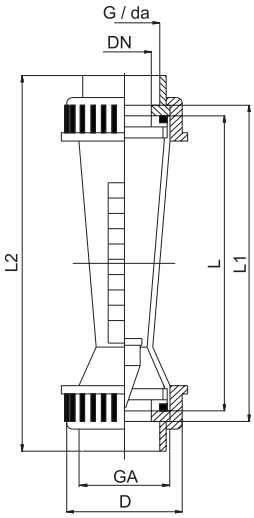

Material				
	Version PVC-U	Version PA	Version PSU	Version PVDF
Measuring tube	PVC-U	PA	PSU	PVDF
Float	PVDF*	PVDF*	PVDF*	PVDF*
Connection				
Glue connection	PVC			
Threaded connection				
standard:	PVC			
optional:	GTW, Brass, Stainless steel (1.4571)			
Gaskets				
standard:	EPDM			
optional:	FPM			

Standard exworks are glue connections.
*optional liquidtight incapsulated magnets (Recording of measurement)
Other versions on request!

Type	Measuring range H_2O [l/h]	Overall dimensions mm da	DN	L	L1	L2	D	GA	Option G	Weight [g]
KM 35-1,5	15 - 150	32	25	350	356	400	60	1 1/2”	1”	475
KM 35-3	30 - 300	32	25	350	356	400	60	1 1/2”	1”	475
KM 35-6	60 - 600	32	25	350	356	400	60	1 1/2”	1”	475
KM 35-10	100 - 1000	32	25	350	356	400	60	1 1/2”	1”	475
KM 35-15	150 - 1500	40	32	350	356	408	72	2”	1 1/4”	710
KM 35-20	200 - 2000	50	40	350	356	418	83	2”1/4”	1 1/2”	1050
KM 35-25	250 - 2500	40	32	350	356	408	72	2”	1 1/4”	710
KM 35-30	300 - 3000	50	40	350	356	418	83	2 1/4”	1 1/2”	1050
KM 35-40	400 - 4000	63	50	350	356	432	103	2 3/4”	2”	1530
KM 35-60	600 - 6000	63	50	350	356	432	103	2 3/4”	2”	1530
KM 35-100	1000 - 10000	63	50	350	356	432	103	2 3/4”	2”	1530
KM 35-150	1500 - 15000	75	65	350	356	444	122	3 1/2”	2 1/2”	2100
KM 35-250	2500 - 25000	75	65	350	356	444	122	3 1/2”	2 1/2”	2100
KM 35-500	10000 - 50000	75	65	350	356	444	122	3 1/2”	2 1/2”	2100

Technical data	KM 35
Operating pressure max.:	see Pressure - Temperature - Diagram
Pressure drop:	see table on page 3
Temperature range:	
PVC-U	-10 bis +60 °C
PA	+5 bis +75 °C
PSU	+5 bis +100 °C
PVDF	0 bis +110 °C
Accuracy:	Accuracy class 4 according to VDE / VDI 3513 page 2

Pressure - Temperature - Diagram

The curves of the diagram present approximate values of the resistance of four different materials in relation to the operating temperature.
Pressure - temperature curves are valid for a calculated life - time of 20 years.
Among other factors the creep strength of the different materials must be considered when determining the permissible operating pressure.
As far as these details or operating temperatures under 0 °C are concerned, we ask you to inform us about the exact operating conditions.

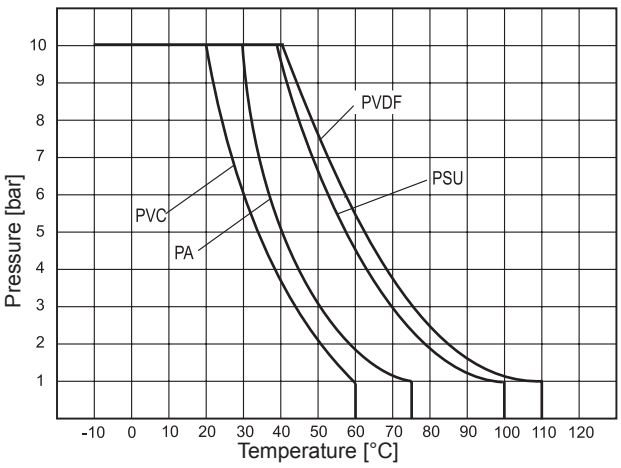

KM35 2 0003 09-06 E M

Measuring ranges for water and air

Type	Range H_2O [l/h]	Pressure drop H_2O at 20 °C [mbar]	Range Air, 20 °C, 0 - 0,2 bar rel. [Nm³/h]	Pressure drop Air at 20 °C [mbar]
KM 35-1,5	15 - 150	12,3	0,6 - 5,7	15,9
KM 35-3	30 - 300	12,3	1,0 - 10	15,9
KM 35-6	60 - 600	12,3	2,0 - 21	15,9
KM 35-10	100 - 1000	12,3	3,0 - 34	15,9
KM 35-15	150 - 1500	12,3	5,0 - 50	15,9
KM 35-20	200 - 2000	12,3	8,0 - 70	15,9
KM 35-25	250 - 2500	12,3	7,0 - 80	15,9
KM 35-30	300 - 3000	12,3	10 - 100	15,9
KM 35-40	400 - 4000	22,2	14 - 125	27,1
KM 35-60	600 - 6000	22,2	20 - 200	27,1
KM 35-100	1000 - 10000	22,2	30 - 320	27,1
KM 35-150	1500 - 15000	33,7	50 - 500	40,0
KM 35-250	2500 - 25000	33,7	80 - 800	40,0
KM 35-500	10000 - 50000	33,7	300 - 1600	40,0

Type	Range Air 1 bar [Nm³/h]	Range Air 2 bar [Nm³/h]	Range Air 3 bar [Nm³/h]	Range Air 4 bar [Nm³/h]	Range Air 5 bar [Nm³/h]	Range Air 6 bar [Nm³/h]	Range Air 7 bar [Nm³/h]	Range Air 8 bar [Nm³/h]
KM 35-1,5	1,0 - 7,5	0,8 - 11	1,0 - 10,5	1,0 - 11	1,0 - 13	1,0 - 13	1,2 - 14	1,0 - 15
KM 35-3	1,5 - 14	2,0 - 18	2,0 - 20	2,0 - 22	2,0 - 24	2,0 - 26	3,0 - 28	3,0 - 30
KM 35-6	3,0 - 30	4,0 - 36	4,0 - 40	5,0 - 45	5,0 - 50	5,0 - 55	6,0 - 58	6,0 - 60
KM 35-10	5,0 - 50	5,0 - 60	5,0 - 70	6,0 - 75	10 - 84	10 - 90	10 - 96	7 - 100
KM 35-15	5,0 - 70	7,0 - 85	8,0 - 100	10 - 110	10 - 120	10 - 130	10 - 140	10 - 150
KM 35-20	10 - 100	10 - 120	12 - 135	20 - 150	15 - 170	15 - 180	20 - 190	15 - 200
KM 35-25	10 - 110	10 - 140	15 - 160	15 - 180	20 - 200	22 - 200	24 - 215	20 - 240
KM 35-30	15 - 140	20 - 160	20 - 190	20 - 220	20 - 240	30 - 260	30 - 280	30 - 280
KM 35-40	20 - 170	15 - 220	20 - 250	31 - 275	20 - 320	30 - 320	20 - 360	40 - 380
KM 35-60	30 - 280	30 - 380	40 - 400	50 - 500	50 - 500	60 - 520	60 - 580	60 - 580
KM 35-100	40 - 440	50 - 540	60 - 620	70 - 700	70 - 800	80 - 820	80 - 900	100 - 950
KM 35-150	80 - 700	80 - 800	102 - 880	114 - 980	125 - 1070	100 - 1300	144 - 1240	153 - 1300
KM 35-250	100 - 1200	140 - 1240	166 - 1400	185 - 1600	200 - 1750	220 - 1880	220 - 2200	250 - 2100
KM 35-500	400 - 2200	600 - 2500	700 - 2900	800 - 3200	800 - 3800	900 - 4000	1050 - 4100	1100 - 4300

The measuring ranges indicated in the table are approximate values at 20 °C.
Other measuring ranges and gases on request.

Caution: Do not use PVC - measuring tubes with Air / Gas - Application !

KM35 3 0001 07-04 E M

Limitswitch, Measuring Sensor

Limitswitch SG-KM

The limitswitches SG-KM serve as event marker for min., max. or any inbetween value of the flow.
They are fitted on the dove-tail of the measuring tube and trigger a signal when the float reaches or passes the switch. As soon as this happens the reed contact opens or closes.
For this function the float must contain magnets.

SG-KM

Type SG-KM-MO-S monostable (normally open)

The contact is closed, when the float is in line with the limitswitch. It opens (event) as soon as the float moves up or down away from the switch, which means increasing or decreasing flow.

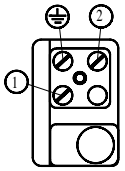

Connection allocation

The polarity of the connectors does not influence the function

Type SG-KM-BI-S/Ö bistable (normally open or normally closed)

The normally open contact closes as soon as the magnetfloat approaches (coming from the bottom) the limitswitch or is in line with the same. When overriding the limitswitch, the switchcondition remains. Only when underriding the limitswitch, the switchcondition will be cancelled.
The normally closed contact is closed under noflow condition and open under flow condition.
Remark: Before the first start up, the float has to pass the limitswitch at least 3 times in order to cancel the monostable behaviour!

Technical Data			
Operating voltage:	max. 470 V AC	**Operating temperature:**	0 °C bis +55 °C
Switch current:	max. 0,5 A	**Ingress protection:**	IP 65 (DIN 40050)
Switch power:	max. 10 W / 10VA	**Hysteresis:**	3 mm
Switch resistance:	< 150 mΩ	**Dimensions:**	34 x 17 x 41 mm
Insulating resistance:	> 10^{11} Ω	**Weight (incl. plug):**	40 g

The electrical max. values must not be exceeded!

Measuring Sensor KME-3000

The KME-3000 detects the position of the magnetic float in the KM and generates a 4 ... 20 mA - signal.
Existing flow meters (with magnetic floats) can be upgrated easily.
This micro-processor controlled unit has to be programmed device-specific by Meister, therefore the customer has to specify the type of the flowmeter.
Screw clamps are used to fit the KME-3000 on the dovetail guide of the flowmeter. The plug connector is located in the upper section. During the installation, ensure that the notch of the KME-3000 coincides with the 50% mark on the flowmeter.

Wiring diagram

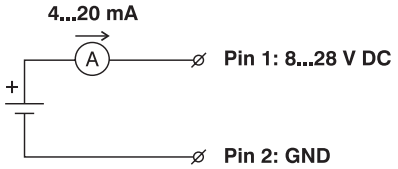

Once installed and the voltage is applied, press the 0 button (refer to right picture) for at least 2 sec to compensate surrounding magnetic influences. During this phase ensure that the float is in its bottom position i.e. no flow must take place.
During normal operation the 0 button must not be actuated!

0 button

Technical Data		
Characteristics	**Power supply**	**8...28 V DC**
2-wire	**Output**	**analog, 4 - 20 mA**
Programming adapted to the specific KM	**Output current 0 % → 100 % + Overrange**	
Non-volatile value storage	During normal operation (Pin 1 - Pin 2)	
11-point calibration	**Min:**	**4.0 → 20.1 mA**
Lower limit value (low-cutoff): 0...99 % *	**Typ.**	**4.0 → 21.0 mA**
Factory settable time lag (low-pass-filter): 0.1...2.5s*	**Max.**	**4.0 → 22.0 mA**
0 button to compensate the surrounding magnetic	**Connection**	**2-pole plug**
influences	**Ingress protection**	**IP 65**
Measuring accuracy better than 0.5 %	**Operating temperature**	**-30 ... +65 °C**
* adjustment according to customer requirements	**Material**	**plastics**

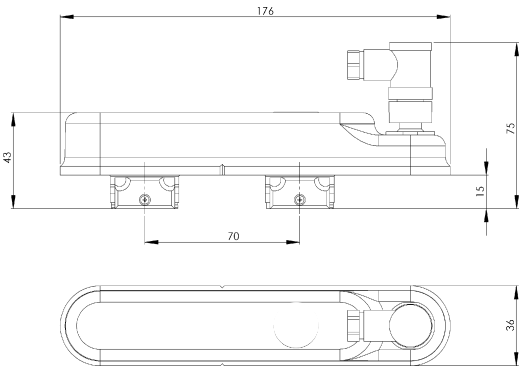

KM35 4 0002 09-08 E M

meister strömungstechnik gmbh
Im Gewerbegebiet 2
63831 Wiesen
Germany
Tel.: +49 (0) 6096 / 97 20 - 0
Fax: +49 (0) 6096 / 97 20 - 30
E-Mail: Info@meister-flow.com
Internet: www.meister-flow.com

Synthetic VA Flowmeters

KM 16, KM 17
KM 18, KM 20

Operation

The flowmeters type KM 16 to KM 20 operate with the float measuring principle

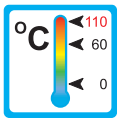

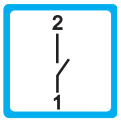

Application

The flowmeters type KM 16 to KM 20 are used for measuring volumeflow of liquid and gaseous media.

Areas of application:

– Coolingsystems and cooling-circuits

– Mechanical Engineering e.g. Weldingmachinery, Laserplants

– Medicine technology

– Pharmaceutical industry

–Research and development

Features

The model proves itself through reliable function and easy handling:

– high accuracy (Accuracy class 4)

– easy to read

– Good suitability for special media by choice between 4 different materials

– Scales can be exchanged subsequently, Special scales on request

– Glue connections or threaded connections

Installation hints

The instrument must be installed vertically in the flow circuit.
The flowdirection is from bottom to top.

The flowmeter must not be used as a supporting part in a pipeconstruction!

The medium must not contain any solid particles!

KM16 1 0002 07-04 E M

Technical Data

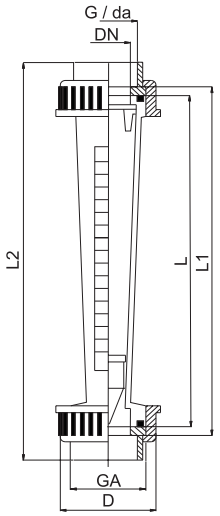

Material	Version PVC-U	Version PA	Version PSU	Version PVDF
Measuring tube	PVC-U	PA	PSU	PVDF
Float	PVDF*	PVDF*	PVDF*	PVDF*
Connection				
Glue connection	PVC			
Threaded connection				
standard:	PVC			
optional:	GTW, Brass, Stainless steel (1.4571)			
Gaskets				
standard:	EPDM			
optional:	FPM			

Standard exworks are glue connections.
*optional liquidtight incapsulated magnets (Recording of measurement)
Other versions on request!

Type	Measuring range H_2O [l/h]	Overall dimensions mm da	DN	L	L1	L2	D	GA	Option G	Weight [g]
KM 16-02	3 - 24	16	10	165	171	199	35	3/4”	3/8”	78
KM 16-06	5 - 60	16	10	165	171	199	35	3/4”	3/8”	78
KM 16-1	10 - 100	16	10	165	171	199	35	3/4”	3/8”	78
KM 16 -2.5	25 - 250	16	10	165	171	199	35	3/4”	3/8”	78
KM 17-05	5 - 50	20	15	170	176	208	43	1”	1/2”	96
KM 17-1.5	15 - 150	20	15	170	176	208	43	1”	1/2”	96
KM 17-2.5	25 - 250	20	15	170	176	208	43	1”	1/2”	96
KM 17-4	40 - 400	20	15	170	176	208	43	1”	1/2”	96
KM 18-1.5	15 - 150	25	20	185	191	229	53	1 1/4”	3/4”	125
KM 18-4	40 - 400	25	20	185	191	229	53	1 1/4”	3/4”	125
KM 18-6	60 - 600	25	20	185	191	229	53	1 1/4”	3/4”	125
KM 18-10	100 - 1000	25	20	185	191	229	53	1 1/4”	3/4”	125
KM 20-2.5	25 - 250	32	25	200	206	250	60	1 1/2”	1”	250
KM 20-4	40 - 400	32	25	200	206	250	60	1 1/2”	1”	250
KM 20-10	100 - 1000	32	25	200	206	250	60	1 1/2”	1”	250
KM 20-15	150 - 1500	32	25	200	206	250	60	1 1/2”	1”	250

Technical data	KM-16	KM-17	KM-18	KM-20
Operating pressure max.:	see Pressure - Temperature - Diagram			
Pressure drop:	see table on page 3			
Temperature range:				
PVC-U	-10 bis +60 °C			
PA	+5 bis +75 °C			
PSU	+5 bis +100 °C			
PVDF	0 bis +110 °C			
Accuracy:	Accuracy class 4 according to VDE / VDI 3513 page 2			

Pressure - Temperature - Diagram

The curves of the diagram present approximate values of the resistance of four different materials in relation to the operating temperature.
Pressure - temperature curves are valid for a calculated life - time of 20 years.
Among other factors the creep strength of the different materials must be considered when determining the permissible operating pressure.
As far as these details or operating temperatures under 0 °C are concerned, we ask you to inform us about the exact operating conditions.

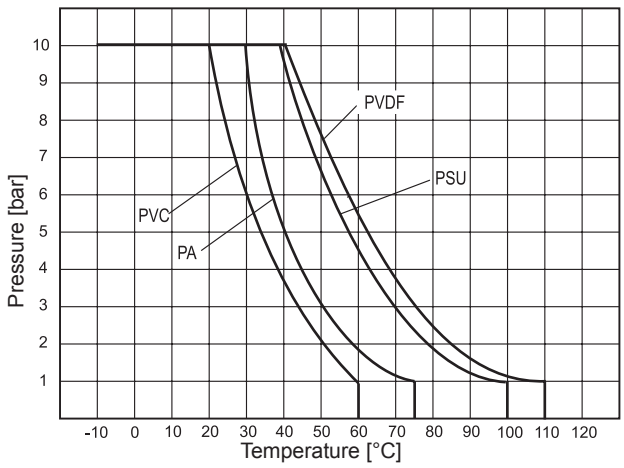

KM16 2 0003 08-06 E M

Measuring ranges for water and air

Type	Range H_2O [l/h]	Pressure drop H_2O at 20 °C [mbar]	Range Air, 20 °C, 0 - 0,2 bar rel. [Nm³/h]	Pressure drop Air at 20 °C [mbar]
KM 16-02	3 - 24	3,3	0,2 - 1,0	4,8
KM 16-06	5 - 60	3,3	0,2 - 3,2	4,8
KM 16-1	10 - 100	3,3	0,5 - 3,6	4,8
KM 16 -2.5	25 - 250	3,3	0,5 - 9,0	4,8
KM 17-05	5 - 50	2,5	0,4 - 2,8	4,3
KM 17-1.5	15 - 150	2,5	0,8 - 6,25	4,3
KM 17-2.5	25 - 250	2,5	0,9 - 9,5	4,3
KM 17-4	40 - 400	2,5	2,0 - 15,0	4,3
KM 18-1.5	15 - 150	6,1	0,5 - 5,5	8,3
KM 18-4	40 - 400	6,1	2,0 - 14,0	8,3
KM 18-6	60 - 600	6,1	2,5 - 22,0	8,3
KM 18-10	100 - 1000	6,1	4,0 - 34,0	8,3
KM 20-2.5	25 - 250	6,1	1,0 - 8,0	8,3
KM 20-4	40 - 400	6,1	2,0 - 14,0	8,3
KM 20-10	100 - 1000	6,1	4,0 - 34,0	8,3
KM 20-15	150 - 1500	6,1	5,0 - 50,0	8,3

Type	Range Air 1 bar [Nm³/h]	Range Air 2 bar [Nm³/h]	Range Air 3 bar [Nm³/h]	Range Air 4 bar [Nm³/h]	Range Air 5 bar [Nm³/h]	Range Air 6 bar [Nm³/h]	Range Air 7 bar [Nm³/h]	Range Air 8 bar [Nm³/h]
KM 16-02	0,2 - 1,3	0,25 - 1,6	0,3 - 1,75	0,3 - 1,9	0,3 - 2,1	0,3 - 2,2		0,3 - 2,3
KM 16-06	0,4 - 3,2	0,2 - 3,8	0,3 - 4,4	0,3 - 4,8	0,3 - 5,1	0,25 - 5,25	0,4 - 5,8	0,3 - 6,0
KM 16-1	0,6 - 5,0	0,8 - 6,0	0,8 - 7,0	0,8 - 7,8	0,8 - 8,0	1,0 - 8,7		1,0 - 9,0
KM 16 -2.5	1,0 - 13,0	1,0 - 16,0	1,5 - 18,0	1,5 - 20,0	2,0 - 23,5	2,0 - 26,0		
KM 17-05	0,2 - 3,2	0,5 - 4,0	0,5 - 4,5	0,3 - 4,6	0,5 - 5,5	0,5 - 5,5		0,5 - 6,5
KM 17-1.5	1,0 - 9,0	1,0 - 11,0	1,5 - 12,0	1,0 - 13,0	1,5 - 15,0	1,5 - 16,0	2,0 - 17,0	2,0 - 18,0
KM 17-2.5	1,5 - 13,0	1,5 - 17,0	2,0 - 20,0	1,5 - 22,0	2,0 - 23,5	4,0 - 26,0	2,0 - 28,0	
KM 17-4	2,0 - 21,0	3,0 - 26,0	3,0 - 30,0	3,0 - 33,0	3,0 - 36,0	4,0 - 40,0		
KM 18-1.5	1,0 - 8,5	1,0 - 11,0	1,0 - 10,5	1,5 - 13,5	1,5 - 15,0	1,0 - 12,0		
KM 18-4	2,0 - 20,0	3,0 - 26,0	4,0 - 30,0	3,0 - 33,0	4,0 - 36,0	4,0 - 38,5		4,0 - 40,0
KM 18-6	4,0 - 31,0	4,0 - 38,0	5,0 - 45,0	5,0 - 48,0	6,0 - 54,0	5,0 - 57,5		6,0 - 66,0
KM 18-10	5,0 - 45,0	6,0 - 58,0	7,5 - 67,5	7,5 - 72,5	8,0 - 80,0	10,0 - 90,0	10,0 - 100	
KM 20-2.5	1,5 - 13,0	1,5 - 16,0	1,5 - 17,0	2,0 - 18,0	2,0 - 19,0	2,0 - 20,0		
KM 20-4	2,0 - 20,0	3,0 - 26,0	3,0 - 30,0	3,0 - 33,0	4,0 - 34,0	4,0 - 38,5		
KM 20-10	4,0 - 46,0	5,0 - 55,0	6,0 - 66,0	7,5 - 72,5	8,0 - 80,0	8,0 - 90,0	7 - 95	
KM 20-15	6,0 - 70,0	7,5 - 90,0	7,5 - 100	10,0 - 120	10,0 - 130	10,0 - 140	10 - 150	

The measuring ranges indicated in the table are approximate values at 20 °C.
Other measuring ranges and gases on request!

Caution: Do not use PVC - measuring tubes with Air / Gas - Application !

KM16 3 0001 07-04 E M

Limitswitch, Measuring Sensor

Limitswitch SG-KM

The limitswitches SG-KM serve as event marker for min., max. or any inbetween value of the flow.
They are fitted on the dove-tail of the measuring tube and trigger a signal when the float reaches or passes the switch. As soon as this happens the reed contact opens or closes.
For this function the float must contain magnets.

SG-KM

Type SG-KM-MO-S monostable (normally open)

The contact is closed, when the float is in line with the limitswitch. It opens (event) as soon as the float moves up or down away from the switch, which means increasing or decreasing flow.

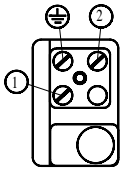

Connection allocation

The polarity of the connectors does not influence the function

Type SG-KM-BI-S/Ö bistable (normally open or normally closed)

The normally open contact closes as soon as the magnetfloat approaches (coming from the bottom) the limitswitch or is in line with the same. When overriding the limitswitch, the switchcondition remains. Only when underriding the limitswitch, the switchcondition will be cancelled.
The normally closed contact is closed under noflow condition and open under flow condition.
Remark: Before the first start up, the float has to pass the limitswitch at least 3 times in order to cancel the monostable behaviour!

Technical Data			
Operating voltage:	max. 470 V AC	**Operating temperature:**	0 °C bis +55 °C
Switch current:	max. 0,5 A	**Ingress protection:**	IP 65 (DIN 40050)
Switch power:	max. 10 W / 10VA	**Hysteresis:**	3 mm
Switch resistance:	< 150 mΩ	**Dimensions:**	34 x 17 x 41 mm
Insulating resistance:	> 10^{11} Ω	**Weight (incl. plug):**	40 g

The electrical max. values must not be exceeded!

Measuring Sensor KME-3000

The KME-3000 detects the position of the magnetic float in the KM and generates a 4 ... 20 mA - signal.
Existing flow meters (with magnetic floats) can be upgrated easily.
This micro-processor controlled unit has to be programmed device-specific by Meister, therefore the customer has to specify the type of the flowmeter.
Screw clamps are used to fit the KME-3000 on the dovetail guide of the flowmeter. The plug connector is located in the upper section. During the installation, ensure that the notch of the KME-3000 coincides with the 50% mark on the flowmeter.

Wiring diagram

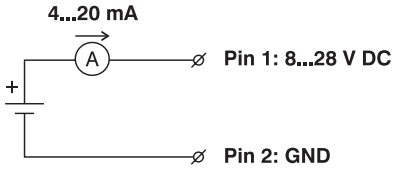

Once installed and the voltage is applied, press the 0 button (refer to right picture) for at least 2 sec to compensate surrounding magnetic influences. During this phase ensure that the float is in its bottom position i.e. no flow must take place.
During normal operation the 0 button must not be actuated!

0 button

Technical Data		
Characteristics	**Power supply**	**8...28 V DC**
2-wire	**Output**	**analog, 4 - 20 mA**
Programming adapted to the specific KM	**Output current 0 % → 100 % + Overrange**	
Non-volatile value storage	During normal operation (Pin 1 - Pin 2)	
11-point calibration	**Min:**	**4.0 → 20.1 mA**
Lower limit value (low-cutoff): 0...99 % *	**Typ.**	**4.0 → 21.0 mA**
Factory settable time lag (low-pass-filter): 0.1...2.5s*	**Max.**	**4.0 → 22.0 mA**
0 button to compensate the surrounding magnetic	**Connection**	**2-pole plug**
influences	**Ingress protection**	**IP 65**
Measuring accuracy better than 0.5 %	**Operating temperature**	**-30 ... +65 °C**
* adjustment according to customer requirements	**Material**	**plastics**

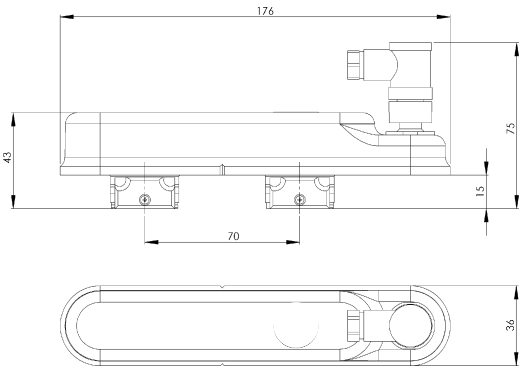

KM16 4 0002 09-08 E M

meister strömungstechnik gmbh
Im Gewerbegebiet 2
63831 Wiesen
Germany
Tel.: +49 (0) 6096 / 97 20 - 0
Fax: +49 (0) 6096 / 97 20 - 30
E-Mail: Info@meister-flow.com
Internet: www.meister-flow.com

DHGF-2, DHGF-4

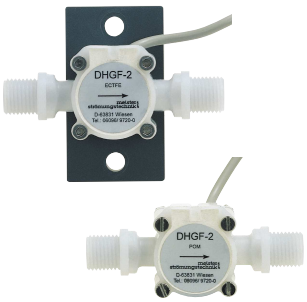

- high accuracy
- high chemical resistance
- any orientation

05

DHSF-2, DHSF-4

- high accuracy
- any orientation
- hose connection

05

DIGA-2, DIGA-4

- high accuracy
- high chemical resistance
- analog output

05

DHGF-10

- high accuracy
- high chemical resistance
- any orientation

05

DIGA-10

- high accuracy
- high chemical resistance
- analog output

05

DHTF-1

- high accuracy
- mounting via T-piece
- PP-version

05

Overview

DHTF-2

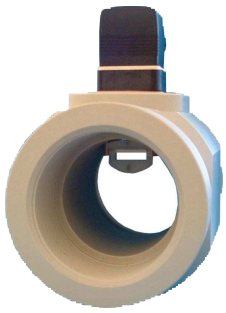

- high accuracy
- threaded connection
- PP-version

05

DHTA-1SE
DHTA-2SE

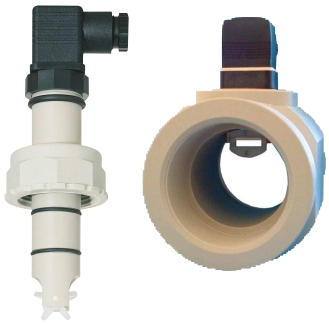

- high accuracy
- any orientation
- analog output

05

FAA

- any orientation
- high reliability
- threaded connection

05

FRA

- any orientation
- high reliability
- threaded connection

05

TD...-15.../PPO

- wide measuring range
- high accuracy
- plastic version

05

TD...-25.../MS

- wide measuring range
- high accuracy
- sturdy brass version

05

Overview

TD...-25.../PP

- wide measuring range
- high accuracy
- PP-version

05

TD...-40.../MS

- wide measuring range
- high accuracy
- sturdy brass version

05

KAA

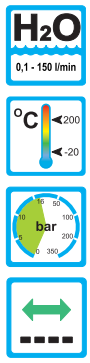

- wide indicating range
- for high temperatures
- threaded connection

05

Overview

Impeller Flowmeter

DHGF-2
DHGF-4

Function

The flowmeters type DHGF-2 and DHGF-4 are impeller flowmeters.

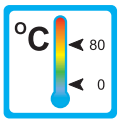

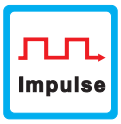

Application

The impeller flowmeters type DHGF-2 and DHGF-4 are employed to measure volume flow of liquids.
Areas of application:

– Mechanical Engineering

– Pharmaceutical Industry

– Chemical Industry

– Research and Development

Features

The series proves itself through reliable function and easy handling. Further characteristics of this model are:

– Universal mounting

– High accuracy

– High chemical resistance (ECTFE-Version)

– Threaded connection

Installation hints

The installation of the flowmeter can be done in any way in the system. The optimum deaeration will be achieved with horizontal mounting. The flow direction must be observed.

The flowmeter must not be used as a supporting part in a pipe construction.

The liquid must not contain any solids.

External magnetic fields influence the measurement. Keep sufficient distance to magnetic fields (e.g. electromotors).

DHGF-2/4 1 0003 04-07 E M

Ranges, Technical data

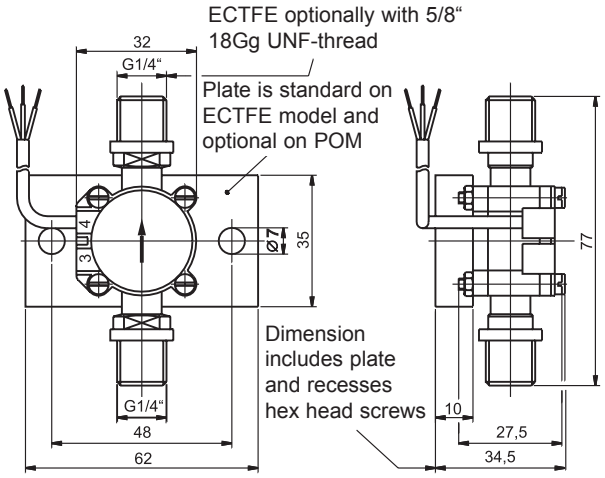

Connection diagram

1 VDC white
2 GND brown
3 OUT green

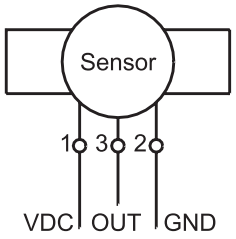

Operating data	DHGF-2	DHGF-4
Flow range (H_2O at 22 °C):	1,5 - 100 l/h	6 - 250 l/h
Sensing principle:	Hall-effect, touchless	
Viscosity range:	1 - 10 cSt	
Accuracy:	± 2 % from scale value (at same operating conditions)	
Repeatability:	< ± 0,8 % from scale value (at same operating conditions)	
Max. operating pressure:	6 bar	
Burst pressure (at 22 °C):	>15 bar	
Operating temperature:	0° C to +80 °C	
Ingress protection:	IP65	
Output signal:	square wave (push-pull output stage)	
Max. output current (at 24 V):	11 mA	
Power supply:	4,5 - 24 VDC (POM-Version),10 - 24 VDC (ECTFE-Version)	
Connection cable (1 m):	Round cable 3 x 0,14 mm² LIYY	

Materials	POM-Version	ECTFE-Version
Housing:	POM	ECTFE
Impeller:	POM	ECTFE
Bearing (spigot bearing)		
for DHGF-2 (axle / bearing):	Corepoint® / POM	Saphir / Rubin
for DHGF-4 (axle / bearing):	Corepoint® / POM	Saphir / Rubin
Magnets:	sinter ceramic	ECTFE-encapsulated
O-Rings:	FKM or EPDM *	FKM or EPDM *
Weight:	approx. 45 g	approx. 50 g
Process connection:	G 1/4"	G 1/4" or 5/8" UNF

* FKM: green colourcode EPDM: black colourcode KALREZ (optional): white colourcode

Pressure drop diagram

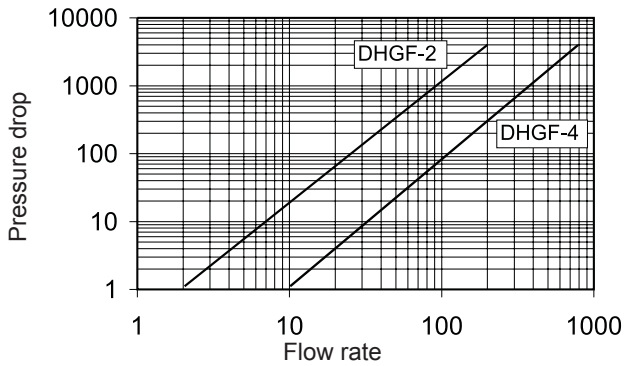

Pulse curve

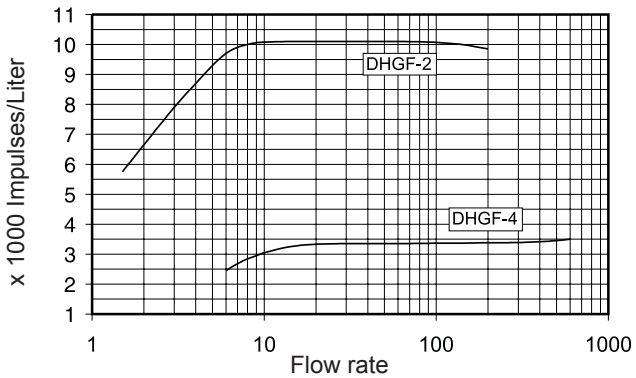

DHGF-2/4 2 0004 04-10 E M

meister strömungstechnik gmbh
Im Gewerbegebiet 2
63831 Wiesen
Germany
Tel.: +49 (0) 6096 / 97 20 - 0
Fax: +49 (0) 6096 / 97 20 - 30
E-Mail: Info@meister-flow.com
Internet: www.meister-flow.com

Impeller Flowmeter

DHSF-2
DHSF-4

Function

The flowmeters type DHSF-2 and DHSF-4 are impeller flowmeters.

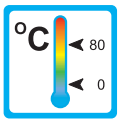

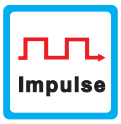

Application

The impeller flowmeters type DHSF-2 and DHSF-4 are employed to measure volume flow of liquids.
Areas of application:

– Mechanical Engineering

– Chemical Industry

– Research and Development

Features

The series proves itself through reliable function and easy handling. Further characteristics of this model are:

– Universal mounting

– High accuracy

– Hose connection

Installation hints

The installation of the flowmeter can be done in any way in the system. The optimum deaeration will be achieved with vertical mounting. The flow direction must be observed.

The flowmeter must not be used as a supporting part in a pipe construction.

The liquid must not contain any solids.

External magnetic fields influence the measurement. Keep sufficient distance to magnetic fields (e.g. electromotors).

DHSF-2/4 1 0003 04-07 E M

Ranges, Technical data

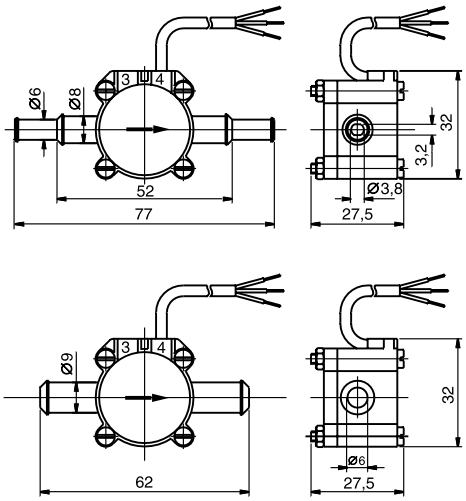

Connection diagram

1 VDC white
2 GND brown
3 OUT green

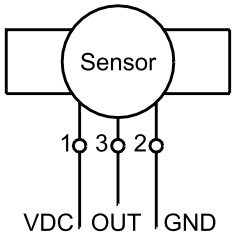

Operating data	DHSF-2	DHSF-4
Flow range (H_2O at 22 °C):	1,5 - 100 l/h	6 - 250 l/h
Sensing principle:	Hall-effect, touchless	
Viscosity range:	1 - 10 cSt	
Accuracy:	± 2 % from scale value (at same operating conditions)	
Repeatability:	< ± 0,8 % from scale value (at same operating conditions)	
Max. operating pressure:	6 bar	
Burst pressure (at 22 °C):	>15 bar	
Operating temperature:	0° C to +80 °C	
Ingress protection:	IP65	
Output signal:	square wave (push-pull output stage)	
Max. output current (at 24 V):	11 mA	
Power supply:	4,5 - 24 VDC	
Connection cable (1 m):	Round cable 3 x 0,14 mm² LIYY	

Materials	POM-Version	
Housing:	POM	
Impeller:	POM	
Bearing (spigot bearing)		
for DHSF-2 (axle / bearing):	Corepoint® / POM	
for DHSF-4 (axle / bearing):	Corepoint® / POM	
Magnets:	sinter ceramic	
O-Rings:	FKM or EPDM *	
Weight:	approx. 45 g	
Process connection:	6 mm / 8 mm hose connection on DHSF-2	9 mm hose connection on DHSF-4

* FKM: green colourcode EPDM: black colourcode KALREZ (optional): white colourcode

Pressure drop diagram

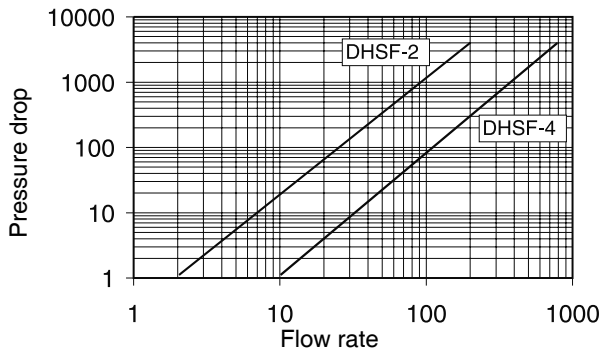

Pulse curve

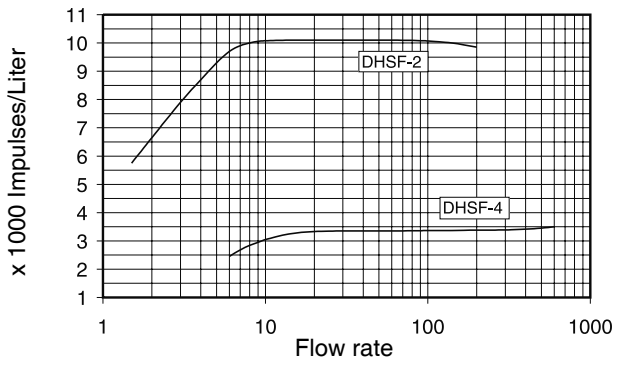

DHSF-2/4 2 0003 09-06 E M

meister strömungstechnik gmbh
Im Gewerbegebiet 2
63831 Wiesen
Germany
Tel.: +49 (0) 6096 / 97 20 - 0
Fax: +49 (0) 6096 / 97 20 - 30
E-Mail: Info@meister-flow.com
Internet: www.meister-flow.com

Impeller Flowmeter

DIGA-2
DIGA-4

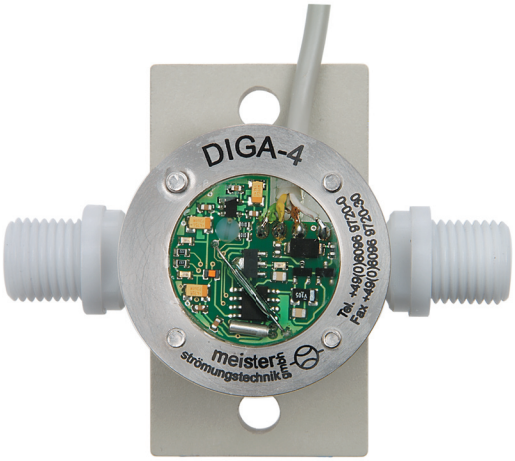

Function

The flowmeters type DIGA-2 and DIGA-4 are impeller flowmeters.

Application

The impeller flowmeters type DIGA-2 and DIGA-4 are employed to measure volume flow of liquids.
Areas of application:

– Mechanical Engineering

– Pharmaceutical Industry

– Chemical Industry

– Research and Development

Features

The series proves itself through reliable function and easy handling.
Further characteristics of this type are:

– Universal mounting

– High accuracy

– Analog output (4 - 20 mA)

– High chemical resistance (ECTFE-Version)

– Threaded connection

Installation hints

The installation of the flowmeter can be done in any way in the system. The optimum deaeration will be achieved with vertical mounting. The flow direction must be observed.

The flowmeter must not be used as a supporting part in a pipe construction.

The liquid must not contain any solids particles.

External magnetic fields influence the measurement. Keep sufficient distance to magnetic fields (e.g. electromotors).

DIGA-2/4 1 0004 04-07 E M

Ranges, Technical data

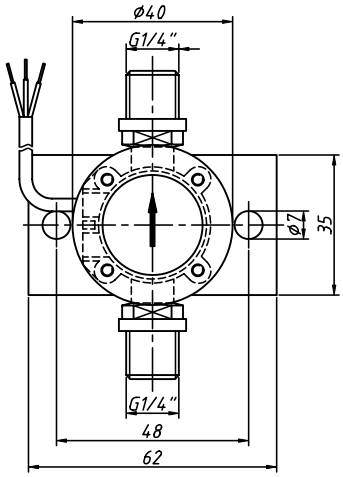

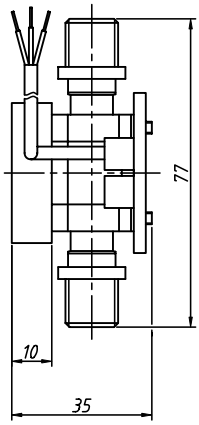

Connection diagram

1: 4 - 20 mA, white
2: 4 - 20 mA, brown

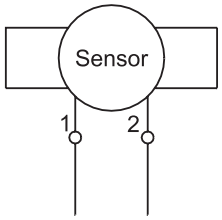

Operating data	DIGA-2	DIGA-4
Flow range (H_2O at 22 °C):	1,5 - 100 l/h	6 - 250 l/h
Sensing principle:	inductive, touchless	
Viscosity range:	1 - 10 cSt	
Accuracy:	± 2 % f.s.d. (at same operating conditions)	
Repeatability:	< ± 0,8 % f.s.d. (at same operating conditions)	
Max. operating pressure:	10 bar	
Burst pressure (at 22 °C):	>15 bar	
Operating temperature:	0 °C to +80 °C	
Ingress protection:	IP65	
Output signal:	4 - 20 mA (The limiting values for 4 and 20 mA are adjustable by means of a magnetic pin)	
Power supply:	10 - 24 VDC (see example „Operating circuit“)	
Connection cable (1,9 m):	Round cable 2 x 0,14 mm² LIYY	

Materials	POM-Version	ECTFE-Version
Housing:	POM	ECTFE
Impeller:	POM	ECTFE
Bearing (spigot bearing)		
for DIGA-2 (axle / bearing):	Corepoint® / POM	Saphir / Rubin
for DIGA-4 (axle / bearing):	Corepoint® / POM	Saphir / Rubin
Magnets:	sinter ceramic	ECTFE-encapsulated
O-Rings:	FKM or EPDM *	FKM or EPDM *
Weight:	approx. 45 g	approx. 50 g
Process connection:	G 1/4"	G 1/4" or 5/8" UNF

* FKM: green colourcode EPDM: black colourcode KALREZ (optional): white colourcode

Pressure drop diagram

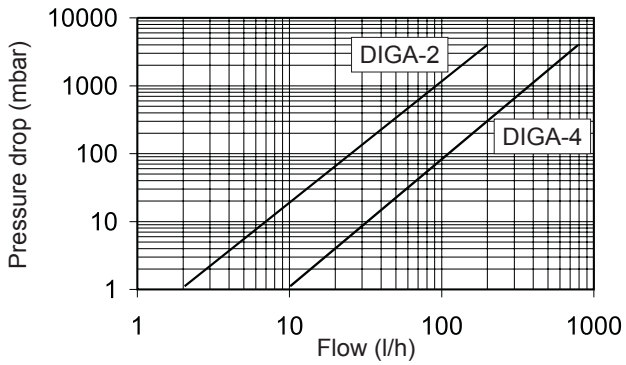

Operating circuit (example)

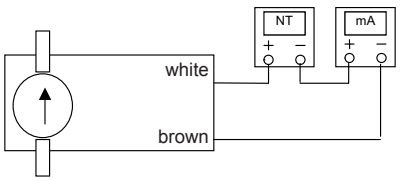

DIGA-2/4 2 0003 04-07 E M

meister strömungstechnik gmbh
Im Gewerbegebiet 2
63831 Wiesen
Germany
Tel.: +49 (0) 6096 / 97 20 - 0
Fax: +49 (0) 6096 / 97 20 - 30
E-Mail: Info@meister-flow.com
Internet: www.meister-flow.com

Impeller Flowmeter

DHGF-10

Function

The flowmeters type DHGF-10 are impeller flowmeters.

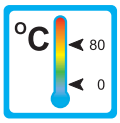

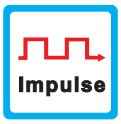

Application

The impeller flowmeters type DHGF-10 are employed to measure volume flow of liquids. Areas of application:

– Mechanical Engineering

– Pharmaceutical Industry

– Chemical Industry

– Research and Development

Features

The series proves itself through reliable function and easy handling. Further characteristics of this model are:

– Universal mounting

– High accuracy

– High chemical resistance (ECTFE-Version)

– Threaded connection

Installation hints

The installation of the flowmeter can be done in any way in the system. The optimum deaeration will be achieved with horizontal mounting. The flow direction must be observed.

The flowmeter must not be used as a supporting part in a pipe construction.

The liquid must not contain any solids.

External magnetic fields influence the measurement. Keep sufficient distance to magnetic fields (e.g. electromotors).

DHGF-10 1 0003 04-07 E M

Ranges, Technical Data

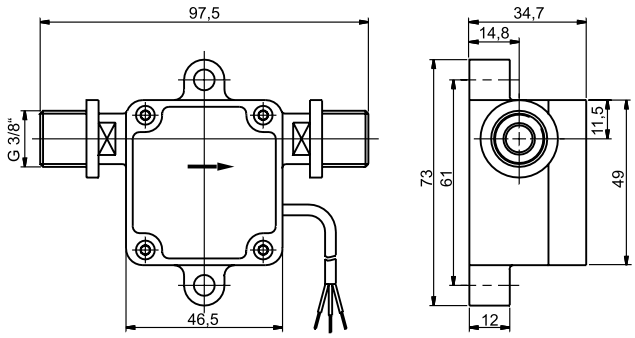

Connection diagram

1 VDC white
2 GND brown
3 OUT green

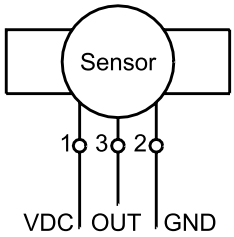

Operating data	DHGF-10 POM-Version	DHGF-10 ECTFE-Version
Flow range (H_2O at 22 °C)		
standard:	50 - 500 l/h	50 - 1000 l/h
optional (with ceramic bearing):	50 - 1000 l/h	—
Sensing principle:	Hall-effect, touchless	
Viscosity range:	1 - 10 cSt	
Accuracy:	± 2 % from scale value (at same operating conditions)	
Repeatability:	< ± 0,8 % from scale value (at same operating conditions)	
Max. operating pressure:	5 bar	
Burst pressure (at 22 °C):	8 bar	
Operating temperature:	0° C to +80 °C	
Ingress protection:	IP65	
Output signal:	square wave (push-pull output stage)	
Max. output current (at 24 V):	11 mA	
Power supply:	4,5 - 24 VDC	
Connection cable (1 m):	Round cable 3 x 0,14 mm² LIYY	

Materials	POM-Version	ECTFE-Version
Housing:	POM	ECTFE
Impeller:	POM	ECTFE
Bearing (spigot bearing)		
standard (axle / bearing):	Corepoint® / POM	ceramic / ceramic
optional (axle / bearing):	ceramic / ceramic	—
Magnets:	POM-encapsulated	ECTFE-encapsulated
O-Rings:	FKM or EPDM *	FKM or EPDM *
Weight:	approx. 80 g	approx. 140 g
Process connection:	G 3/8"	G 3/8"

* FKM: green colourcode EPDM: black colourcode

Pressure drop diagram

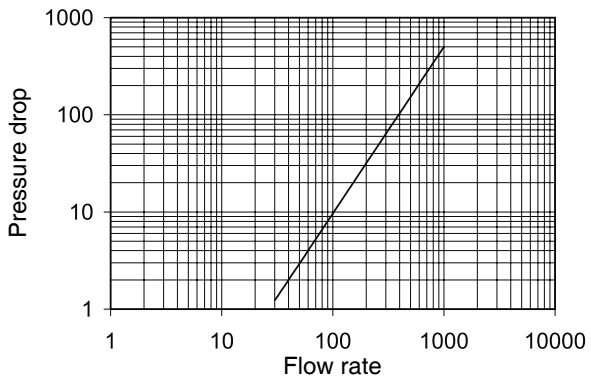

Pulse curve

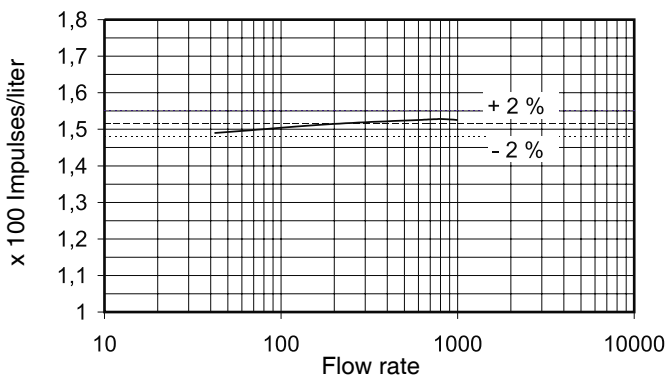

DHGF-10 2 0002 04-05 E M

meister strömungstechnik gmbh
Im Gewerbegebiet 2
63831 Wiesen
Germany
Tel.: +49 (0) 6096 / 97 20 - 0
Fax: +49 (0) 6096 / 97 20 - 30
E-Mail: Info@meister-flow.com
Internet: www.meister-flow.com

Impeller flowmeter

DIGA-10

Function

The flowmeters type DIGA-10 are impeller flowmeters.

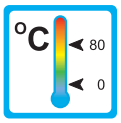

Application

The impeller flowmeters type DIGA-10 are used for measuring volume flow of liquids.

Areas of application:

– Mechanical engineering

– Pharmaceutical industry

– Chemical industry

– Research and development

Features

The series proves itself through reliable function and easy handling.
Further characteristics of this type are:

– Universal mounting

– High accuracy

– Analog output (4 - 20 mA)

– High chemical resistance (ECTFE-Version)

– Threaded connection

Installation hints

The installation of the flowmeter can be done in any orientation in the system.
The optimum deaeration will be achieved with vertical mounting. The flow direction must be observed.

The flowmeter must not be used as a supporting part in a pipe construction.

The liquid must not contain any solids.

External magnetic fields influence the measurement. Keep sufficient distance to magnetic fields (e.g. electromotors).

DIGA-10 1 0003 04-07 E M

Ranges, technical data

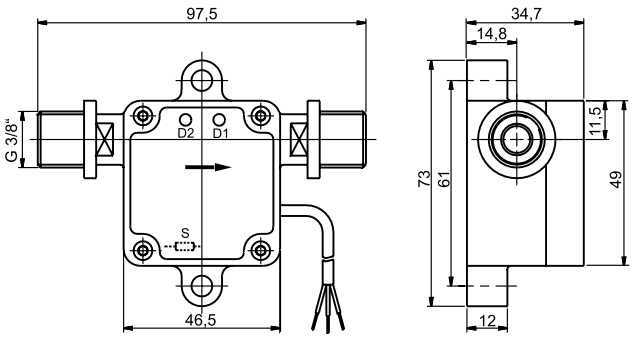

Connection diagram

1: 4 - 20 mA, white
2: 4 - 20 mA, brown

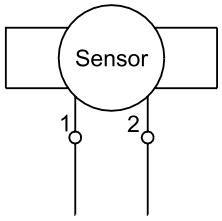

Operating data	DIGA-10 POM-version	DIGA-10 ECTFE-version
Flow range (H_2O at 22 °C):		
standard:	50 - 500 l/h	50 - 1000 l/h
optional (with ceramic bearing):	50 - 1000 l/h	—
Sensing principle:	inductive, touchless	
Viscosity range:	1 - 10 cSt	
Accuracy:	± 2 % of full scale (at same operating conditions)	
Repeatability:	< ± 0,8 % of full scale (at same operating conditions)	
Max. operating pressure:	5 bar	
Burst pressure (at 22 °C):	8 bar	
Operating temperature:	0° C to +80 °C	
Ingress protection:	IP65	
Output signal:	4 - 20 mA (The limiting values are adjustable by user)	
Power supply:	10 - 24 VDC (see example „Operating circuit“)	
Connection cable (1 m):	round cable 2 x 0,14 mm² LIYY	

Materials	POM-version	ECTFE-version
Housing:	POM	ECTFE
Impeller:	POM	ECTFE
Bearing (spigot bearing)		
standard (axle / bearing):	Corepoint® / POM	ceramic / ceramic
optional (axle / bearing):	ceramic / ceramic	—
Magnets:	POM-encapsulated	ECTFE-encapsulated
O-Rings:	FKM or EPDM *	FKM or EPDM *
Weight:	approx. 80 g	approx. 140 g
Process connection:	G 3/8"	G 3/8"

* FKM: green colourcode EPDM: black colourcode

Pressure drop diagram

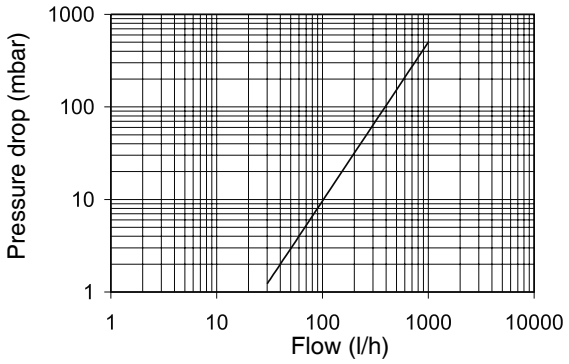

Operating circuit (example)

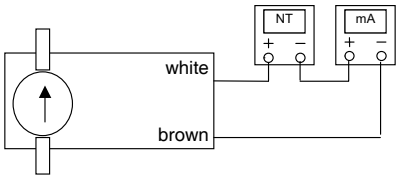

DIGA-10 2 0002 06-05 E M

meister strömungstechnik gmbh
Im Gewerbegebiet 2
63831 Wiesen
Germany
Tel.: +49 (0) 6096 / 97 20 - 0
Fax: +49 (0) 6096 / 97 20 - 30
E-Mail: Info@meister-flow.com
Internet: www.meister-flow.com

DHTF-1

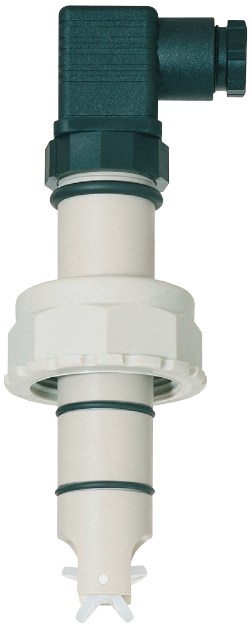

Function

The flowmeters type DHTF-1 are impeller flowmeters.

Application

The impeller flowmeters type DHTF-1 are employed to measure and monitor volume flow of liquids.

Areas of application:

– Mechanical engineering

– Chemical industry

– Research and development

Features

The series proves itself through reliable function and easy handling. Further characteristics of this model are:

– PP-Version

– High accuracy

– Mounting in different pipe diameters possible (mounting via T-piece)

Installation hints

The flowmeter can be installed vertically or horizontally. The unit must not be installed upside down (Danger of sedimentation). The flow direction must be observed.

The flowmeter must not be used as a supporting part in a pipe construction.

The liquid must not contain any solids.

External magnetic fields influence the measurement. Keep sufficient distance to magnetic fields (e.g. electromotors).

DHTF-1 1 0003 04-07 E M

Technical data

Dimension outline drawing DHTF-1

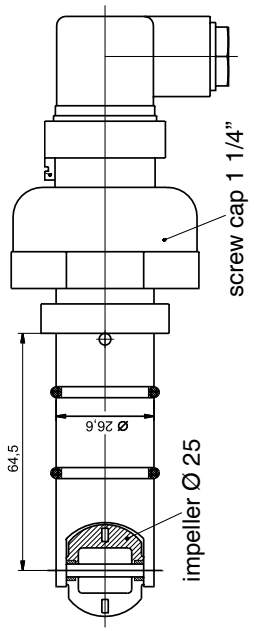

Electric connections		
Plug DIN 43650 Form A		
Power supply: 4,5 - 24 VDC		Ingress protection: IP 65
Pin alloca-tion:	PIN 1: 4,5 - 24 VDC	PIN 2: signal
	PIN ⏚ : ground	

Operating data	
Flow range (H_2O at 22 °C):	0,15 - 10 m/s
Sensing principle:	Hall effect, touchless
Viscosity:	0,5 - 20 cSt
Accuracy:	± 1 % of full scale over calibrated range
Repeatability:	± 0,5 % of full scale over calibrated range
max. operating pressure:	10 bar
Burst pressure (at 22 °C):	15 bar
Operating temperature:	0° C to +80 °C
Output:	open collector
Output signal:	square wave
Output frequency:	42 Hz / m/s
max. output current (at 24 V):	11 mA*

* at temperatures < 60 °C: 15 mA

Materials	
Sensor housing:	PP
Impeller:	ECTFE (HALAR®)
Bearing (axle / bearing):	ceramic (AL_2O_3) / ceramic (AL_2O_3)
Magnets:	ECTFE-encapsulated
O-Rings:	Viton® (optional: EPDM)
Weight:	approx. 126 g
Process connection:	Mounting in pipe connection via T-piece

DHTF-1 2 0002 07-05 E M

meister strömungstechnik gmbh
Im Gewerbegebiet 2
63831 Wiesen
Germany
Tel.: +49 (0) 6096 / 97 20 - 0
Fax: +49 (0) 6096 / 97 20 - 30
E-Mail: Info@meister-flow.com
Internet: www.meister-flow.com

DHTF-2

Function

The flowmeters type DHTF-2 are impeller flowmeters.

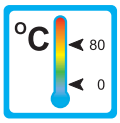

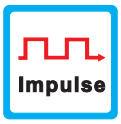

Application

The impeller flowmeters type DHTF-2 are employed to measure and monitor volume flow of liquids.

Areas of application:

– Mechanical engineering

– Chemical industry

– Research and development

Features

The series proves itself through reliable function and easy handling. Further characteristics of this model are:

– PP-version

– High accuracy

– Threaded connection

Installation hints

The flowmeter can be installed vertically or horizontally. The unit must not be installed upside down (Danger of sedimentation). The flow direction must be observed.

The flowmeter must not be used as a supporting part in a pipe construction.

The liquid must not contain any solids.

External magnetic fields influence the measurement. Keep sufficient distance to magnetic fields (e.g. electromotors).

DHTF-2 1 0003 04-07 E M

Ranges, technical data

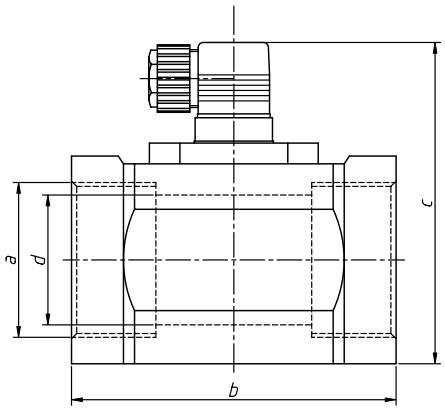

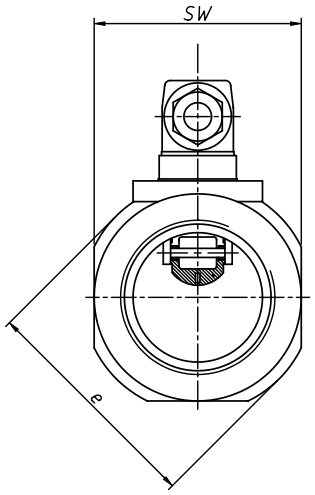

Electric connection		
Plug DIN 43650 Form A		
Power supply: 4,5 - 24 VDC		Ingress protection: IP 65
Pin allocation:	PIN 1: 4,5 - 24 VDC	PIN 2: signal
	PIN ⏚: ground	

Dimensions

Fitting	Overall dimensions [mm]					
	a	SW	e	d	c	b
DN 25	G 1"	70	74	25	109	110
DN 32	G 1 1/4"	70	78	32	115	110
DN 40	G 1 1/2"	75	80	40	118	120
DN 50	G 2"	75	89	50	125	125

Operating data	
Flow range (H_2O at 22 °C):	0,15 - 10 m/s
Sensing principle:	Hall effect, touchless
Viscosity range:	0,5 - 20 cSt
Accuracy:	± 1 % of f.s.d. over calibrated range
Repeatability:	± 0,5 % of f.s.d. over calibrated range
Max. operating pressure:	10 bar
Burst pressure (at 22 °C):	15 bar
Operating temperature:	0 °C to 80 °C
Output:	Open-Collector NPN sinking
Output signal:	square wave
Output frequency:	approx. 42 Hz / m/s
Max. current output (at 24 V):	11 mA

Materials	
Housing:	PP / PP
Impeller:	ECTFE (HALAR®)
Bearing (axle / bearing):	ceramic (AL_2O_3) / ceramic (AL_2O_3)
Magnets:	ECTFE-encapsulated
O-Rings:	Viton® (optional EPDM)
Process connection:	Threaded connection

DHTF-2 2 0002 07-05 E M

meister strömungstechnik gmbh
Im Gewerbegebiet 2
63831 Wiesen
Germany
Tel.: +49 (0) 6096 / 97 20 - 0
Fax: +49 (0) 6096 / 97 20 - 30
E-Mail: Info@meister-flow.com
Internet: www.meister-flow.com

DHTA-1SE
DHTA-2SE

Function

The flowmeters type DHTA-1SE and DHTA-2SE are impeller flowmeters.

Application

The impeller flowmeters type DHTA-1SE and DHTA-2SE are employed to measure and monitor volume flow of liquids. Areas of application:

– Mechanical Engineering

– Pharmaceutical Industry

– Chemical Industry

– Research and Development

Features

The series proves itself through reliable function and easy handling. Further characteristics of this model are:

– PP-Version

– High accuracy

– Analog output (4 - 20 mA)

– DHTA-1SE:
Mounting in different pipe diameters possible (mounting via T-piece)

– DHTA-2SE:
Threaded connection

Installation hints

The flowmeter can be installed vertical or horizontal. The unit must not be installed on the bottom (Danger of sedimentation). The flow direction must be observed.

The flowmeter must not be used as a supporting part in a pipe construction.

The liquid must not contain any solids.

External magnetic fields influence the measurement. Keep sufficient distance to magnetic fields (e.g. electromotors).

DHTA- SE 1 0003 04-07 E M

Ranges, Technical data

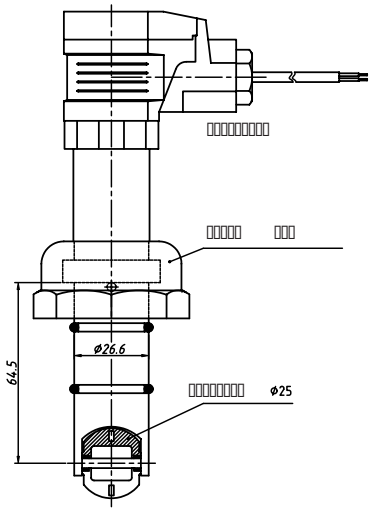

DHTA-1SE

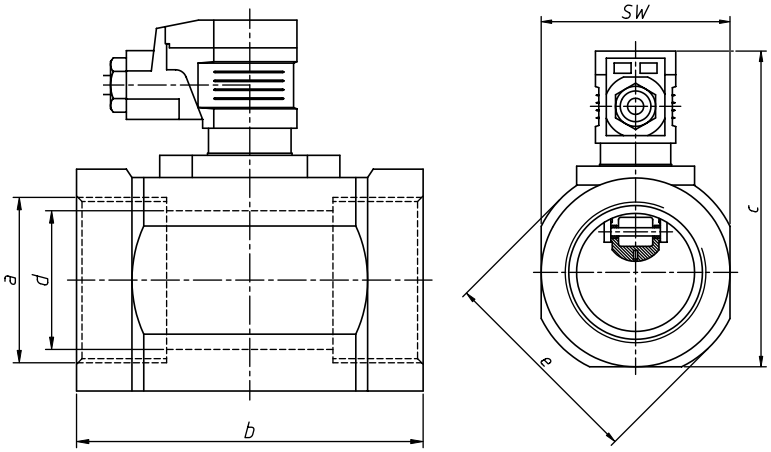

Dimensions DHTA-2SE

Fitting	Dimensions [mm]					
	a	SW	e	d	c	b
DN 25	G 1"	70	74	25	119	110
DN 32	G 1 1/4"	70	78	32	123	110
DN 40	G 1 1/2"	75	80	40	125	120
DN 50	G 2"	75	89	50	135	125

Operating data	DHTA-1SE	DHTA-2SE
Flow range (H_2O at 22 °C):	0,15 - 10 m/s	
Sensing principle:	inductive, touchless	
Viscosity range:	0,5 - 20 cSt	
Accuracy:	± 1 % f.s.d. over calibrated range	
Repeatability:	± 0,5 % f.s.d. over calibrated range	
Max. operating pressure:	10 bar	
Burst pressure (at 22 °C):	15 bar	
Operating temperature:	0 °C to +80 °C	
Ingress protection:	IP 65	
Output signal:	4 - 20 mA (adjustable)	
Power supply:	10 - 24 VDC (see example „Operating circuit“)	
Connection cable:	Round cable 2 x 0,14 mm² LIYY	

Materials	DHTA-1SE	DHTA-2SE
Fitting / Sensor head:	—	PP /PP
Housing:	PP	—
Impeller:	ECTFE	ECTFE
Bearing (spigot / bearing):	ceramic (AL_2O_3) / ceramic (AL_2O_3)	ceramic (AL_2O_3) / ceramic (AL_2O_3)
Magnets:	ECTFE-encapsulated	ECTFE-encapsulated
O-Rings:	Viton (optional EPDM)	Viton (optional EPDM)
Weight:	approx. 126 g	depends on fitting
Process connection:	Mounting in pipe connection via T-piece	Threat connection

Connection diagram

Colour	Explanation	Characteristic data
white	4 - 20 mA signal line	4 - 20 mA
brown	4 - 20 mA signal line	4 - 20 mA

Operating circuit (example)

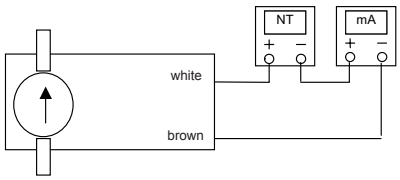

DHTA- SE 2 0002 04-05 E M

meister strömungstechnik gmbh
Im Gewerbegebiet 2
63831 Wiesen
Germany
Tel.: +49 (0) 6096 / 97 20 - 0
Fax: +49 (0) 6096 / 97 20 - 30
E-Mail: Info@meister-flow.com
Internet: www.meister-flow.com

Flow Indicator

FAA

Operation

The models FAA are impeller-flow indicators

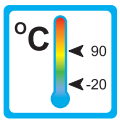

Application

The flow indicators model FAA are used to indicate flow of liquid media.

Areas of application for example:

– Coolingsystems and cooling-circuits

– Mechanical Engineering

– Watertreatment

– Pharma industry

– Research and development

Features

The FAA series proves itself through reliable function and easy handling.
Further characteristics of this sturdy type are:

– universal mounting

– high reliability

– threaded connection

Installation hints

The installation of the flow indicator can be done in any way in the system. The flow direction must be observed. In case of very low flow we suggest a vertical mounting.

The flow indicator must not be used as a supporting part in a pipeconstruction!

The medium must not contain any solid particles!
We recommend the installation of strainer type SFD or SFM.

FAA 1 0002 02-05 E M

Technical Data

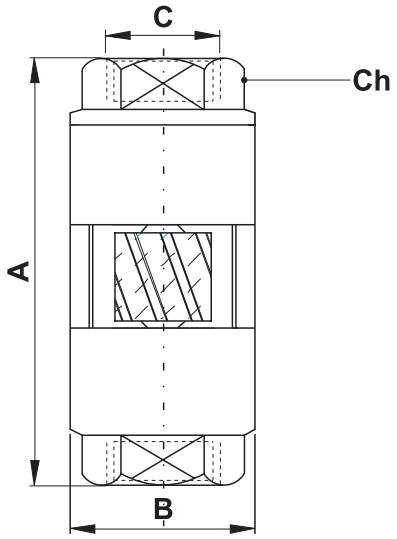

Summary of types FAA

Type	Flowrate H_2O [l/min]	A	B	C	Ch	Weight [g]	max. Press. [bar]	max. Temp. [°C]
FAA-8	1 - 10	59	25	1/4"	19	123	10	90
FAA-10	2 - 20	71	30	3/8"	24	190	8	90
FAA-15	3 - 30	71	30	1/2"	24	160	8	90
FAA-20	4 - 40	106	47	3/4"	40	675	5	90
FAA-25	6 - 60	106	47	1"	40	572	5	90

NPT-thread on request

Material:	Brass
Body:	Brass nickel-plated
Impeller:	Hostaform® red
Sight glass:	Pyrex®
Gaskets:	NBR

Stainless steel model (Aisi 304/316) on request

FAA 2 0002 02-05 E M

meister strömungstechnik gmbh
Im Gewerbegebiet 2
63831 Wiesen
Germany
Tel.: +49 (0) 6096 / 97 20 - 0
Fax: +49 (0) 6096 / 97 20 - 30
E-Mail: Info@meister-flow.com
Internet: www.meister-flow.com

Flow Indicator

FRA

Operation

The models FRA are impeller flow indicators

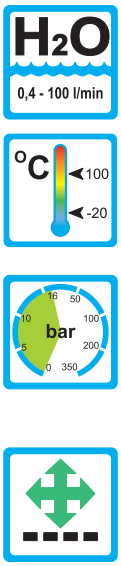

Application

The flow indicators model FRA are used to indicate flow of liquid media.

Areas of application :

– Coolingsystems and cooling-circuits

– Mechanical Engineering

– Watertreatment

– Pharma industry

– Research and development

Features

The FRA series proves itself through reliable function and easy handling.
Further characteristics of this sturdy type are:

– universal orientation

– high reliability

– threaded connection

Installation hints

The installation of the flow indicator can be done in any way in the system. The flow direction must be observed. In case of very low flow we suggest a vertical mounting.

The flow indicator must not be used as a supporting part in a pipe construction!

The medium must not contain any solid particles!
We recommend the installation of strainers type SFD or type SFM.

FRA 1 0001 11-04 E M

Technical Data

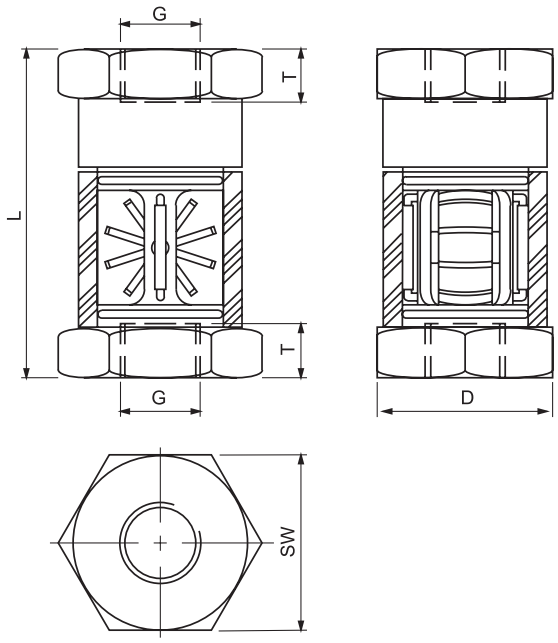

Summary of types FRA

Type	Flowrate min. H_2O [l/min]	Flowrate max. H_2O [l/min]	G	Overall dimensions mm SW	D	T	L	Weight approx. [g]
FRA-8	0,7	4	1/4"	36	30	12	71	300
FRA-10	0,8	8	3/8"	36	30	14	75	300
FRA-15	1,4	12	1/2"	46	40	14	86	600
FRA-20	1,4	25	3/4"	46	40	16	95	600
FRA-25	1,7	40	1"	46	40	18	105	600
FRA-32	8,0	80	1 1/4"	70	65	20	120	1500
FRA-40	8,0	100	1 1/2"	70	65	22	130	1600

Operating data	**FRA**	
Operating pressure max.:	PN 16 bar	
Operating temperature max.:	100 °C	
Pressure drop:	0,25 bar	
Material	**Brass**	**Stainless Steel**
Body:	Brass nickel-plated	1.4305
Rotor (DN 8 to DN 25):	POM red	POM red
Rotor (DN 32 to DN 40):	Nylon white	Nylon white
Wiper:	Polyolitin	Polyolitin
Gaskets:	Perbunan	Viton

FRA 2 0002 05-07 E M

meister strömungstechnik gmbh
Im Gewerbegebiet 2
63831 Wiesen
Germany
Tel.: +49 (0) 6096 / 97 20 - 0
Fax: +49 (0) 6096 / 97 20 - 30
E-Mail: Info@meister-flow.com
Internet: www.meister-flow.com

Flowmeter

TDH...-15.../PPO
TDI...-15.../PPO

Function

The flowmeters type TDH...-15.../PPO and TDI...-15.../PPO are turbine flowmeters.

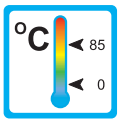

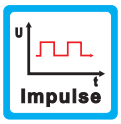

Application

The turbine flowmeters type TDH...-15.../PPO and TDI...-15.../PPO are employed to measure and monitor volume flow of liquids.
Areas of application:

– Medicine technology

– Pharmaceutical Industry

– Chemical Industry

– Research and Development

Features

The rotors of the series TDH...-15.../PPO are equipped with magnets and a Hall-sensor detects the rotation of the rotor.
The rotors of the series TDI...-15.../PPO are equipped with Stainless Steel-pins and an inductive proximity switch detects the rotation.
Further characteristics of both series are:

– special designed guide vanes ensure a proportionate stream to the rotor

– superior saphire seating

– high accuracy

– Outputs (alternatively): frequency-, analog- or switch output

– Plastic version
optional: body in Brass

Installation hints

The installation of the flowmeter can be done in any orientation in the system. The flow direction must be observed.

The flowmeter must not be used as a supporting part in a pipe construction.

The medium must not contain any solids! We recommend the installation of a strainer.

External magnetic fields influence the measurement. Keep sufficient distance to magnetic fields (e.g. electromotors).

The operating instructions for TDH...-15.../PPO and TDI...-15.../PPO must be observed under any circumstances.

TD -15 /PPO 1 0003 04-07 E M

Technical data

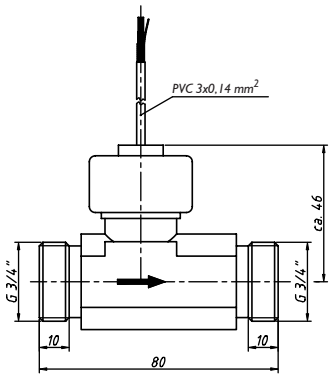

TDHK-15I/PPO

TDIK-15I/PPO

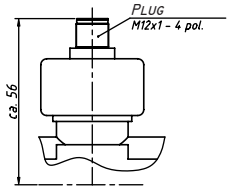

TDHS-15I/PPO

TDIS-15I/PPO

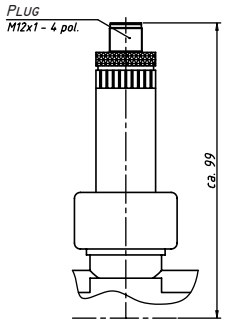

TDHS-15A/PPO

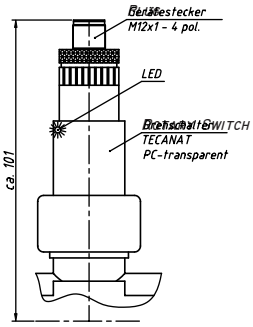

TDHS-15S/PPO

TDHS-15SI/PPO

Versions					
Type	Measuring value sensing		Output		
	Hall-Sensor	Inductive proximity switch	Impulse output (see page 3)	Analog output (see page 4)	Switch output (see page 4)
TDHK-15I/PPO	▲		▲		
TDIK-15I/PPO		▲	▲		
TDHS-15I/PPO	▲		▲		
TDIS-15I/PPO		▲	▲		
TDHS-15A/PPO	▲			▲	
TDHS-15S/PPO	▲				▲
TDHS-15SI/PPO	▲		▲		▲
Besides the standard version (.../PPO) optional a Brass-version (.../MS) is available.					

Technical data		
	Units with hall-sensor TDH...	**Units with inductive proximity switch TDI...**
Process connection:	G 3/4" male thread with screw nuts and flat seals	
Nominal range:	DN 15	
Max. medium temperature:	85 °C	
Nominal pressure:	PN 10	
Range:	2 - 40 l/min	
Start of signal output:	0,3 l/min	
Max. size of solids in medium:	0,5 mm	
Electric connection:		
Cable connection (TDHK... or TDIK...)	1,5 m shielded PVC-cable	2,0 m shielded PVC-cable
	T_{max} = 70 °C	T_{max} = 70 °C
Plugs (TDHS... or TDIS...)	4-Pin-Plug M12x1	4-Pin-Plug M12x1
Power supply (Pulse output):	4,5...24 VDC	12...24 VDC
Ingress protection:	IP 54	
Electric output:	see page 3 and 4	
Options:		
Strainer	cap form, screen aperture size 0,5 mm, T_{max} = 60 °C (continous load), T_{max} = 85 °C (max 1 h)	

Materials, Technical data, Signal output

Materials	Wetted part ?	Units with Hall-Sensor TDH...	Units with inductive proximity switch TDI...
Measuring tube	**yes**		
Standard version (.../PPO)		PPO (Noryl GFN3)	
Brass version (.../MS)		Brass (CuZn36Pb2As)	
Sensor	**yes**	PPO (Noryl GFN3)	
Screw cap	**no**	PA GF 30	
Turbine chamber and impeller	**yes**	PEI ULTEM	
O-Ring / gasket	**yes**	NBR	NBR (standard), Viton (option)
Bearing / Axle	**yes**	Axle Arcap AP1D with hard metal pins in saphire bearing	
Bearing support	**yes**	Arcap AP1D	
Impeller magnets	**yes**	Hard Ferrite magnet	Stainless Steel pins
Strainer (option)	**yes**	POM / Stainless Steel	

Impulse rate [1/l]

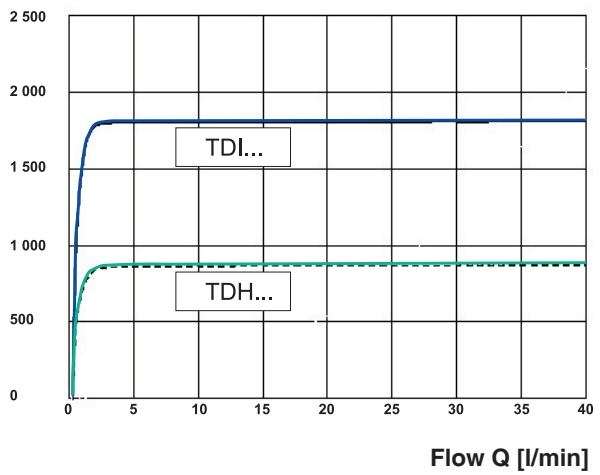

Pressure drop △p [bar]

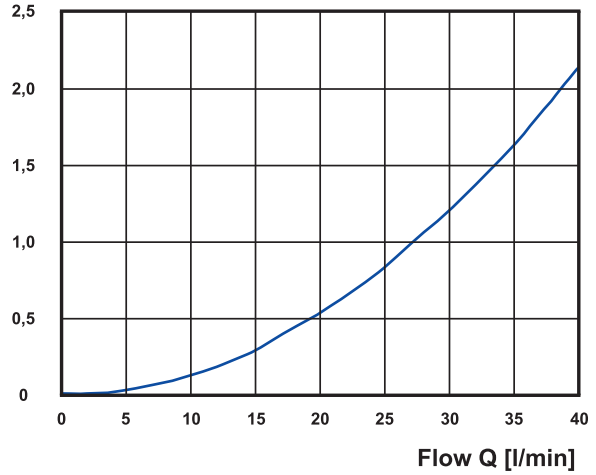

Technical data impulse output (TDHK-15l/PPO, TDHS-15l/PPO, TDIK-15l/PPO and TDIS-15l/PPO)	Units with Hall-Sensor TDH...	Units with inductive proximity switch TDI...
Accuracy:	± 1% of range	± 0,5 % of range
Repeatability:	± 0,2 %	± 0,1%
Output signal:		
Pulse rate / K-factor	855 Pulses / Liter	1795 Pulses / Liter
Resolution	1,2 ml / Pulse	0,6 ml / Pulse
Signal form	square wave	square wave
	NPN open collector	PNP or NPN open collector
Signal current	max. 10 mA	max. 10 mA
Connection diagram	A1 and A2 (see below)	B1, B2, C1 and C2 (see below)
Start of signal output:	0,3 l/min	0,3 l/min

A1: TDHK-15l/PPO (Cable)

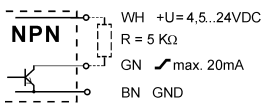

A2: TDHS-15l/PPO (Plug)

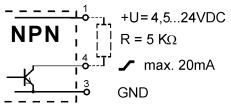

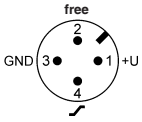

BK = black

BU = blue

WH = white

BN = brown

GN = green

B1: TDIK-15l/PPO (PNP, Cable)

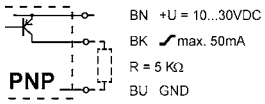

B2: TDIS-15l/PPO (PNP, Plug)

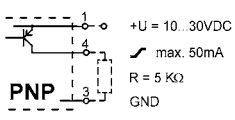

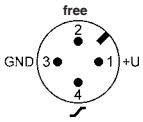

C1: TDIK-15l/PPO (NPN, Cable)

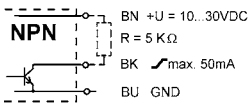

C2: TDIS-15l/PPO (NPN, Plug)

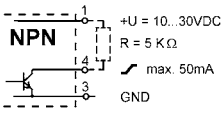

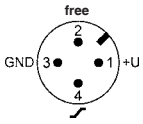

TD -15 /PPO 3 0002 06-05 E M

Electric output

Technical data analog output (TDHS-15A/PPO)				
Accuracy:	± 1% of range			
Repeatability:	± 0,2%			
Output signal:	4...20 mA			
Current limit:	approx. 26 mA			
Scale:				
(Please state with order)	0...5 l/min	0...10 l/min	0...20 l/min	0...40 l/min
Power supply:	18...30 VDC			
Max. current consumption:	30 mA			
Max. ohmic resistance:	250 Ω against GND			
Residual ripple:	0,2 mA $_{SS}$ through whole scale			
Design:	3-way, galvanically not insulated			
	combined GND of supply voltage and output signal			
Electric connection:	4-Pin Plug, M12x1			
Ingress protection:	IP 54			
Diagram of connection:	D1			
Max. medium temperature:	80 °C			
Material measuring transducer housing:	Plastic PA			

Technical data switch output (TDHS-15S/PPO) / switch output + pulse output (TDHS-15SI/PPO)																
Switch point setup:	by rotary switch															
Switch point table:																
Switch position	**0**	**1**	**2**	**3**	**4**	**5**	**6**	**7**	**8**	**9**	**A**	**B**	**C**	**D**	**E**	**F**
Switch point [l/min]	**0,5**	**1,0**	**1,5**	**2,0**	**2,5**	**3,0**	**3,5**	**4,5**	**5,5**	**7,5**	**9,5**	**11,5**	**15,5**	**19,5**	**24,5**	**29,5**
	Switch points for decreasing flow															
Switch hysteresis:	0,5 l/min above switch-off point															
Accuracy:	± 0,2 l/min ±2 % of selected switch point															
Output:																
TDHS-15S/PPO																
(Switch output only)	potential free contact, opens below setpoint															
	contact rating max. 125 VAC/DC, 100 mA															
TDHS-15SI/PPO																
(Switch output + pulse output)	Switch output switches against supply voltage															
	contact rating max. 100 mA															
	Impulse output delivers flow proportional frequency signal															
	NPN open collector, max. 10 mA															
Power supply:	12...24 VDC															
Current input:	max. 25 mA															
Ingress protection:	IP 54 with closed hull and attached cable box															
Indication, internal:	LED yellow = ok, LED red = alarm															
Max. medium temperature:	80 °C															
Electric connection:	4-Pin Plug, M12x1															
Diagram of connection:	E1 and E2 (see below)															
Material housing:	Plastic PA, transparent															

TD -15 /PPO 4 0002 08-05 E M

D1: TDHS-15A/PPO

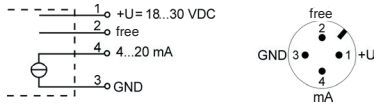

E1: TDHS-15S/PPO

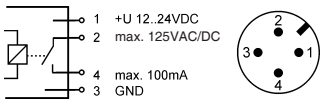

E2: TDHS-15SI/PPO

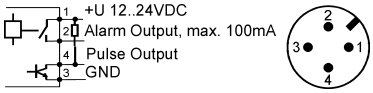

meister strömungstechnik gmbh
Im Gewerbegebiet 2
DE - 63831 Wiesen
Tel.: +49 (0) 6096 / 97 20 - 0
Fax: +49 (0) 6096 / 97 20 - 30
E-Mail: Info@meister-flow.com
Internet: www.meister-flow.com

Flowmeter

TDH...-25.../MS
TDI...-25.../MS

Function

The flowmeters type TDH...-25.../MS and TDI...-25.../MS are turbine flowmeters.

Application

The turbine flowmeters type TDH...-25.../MS and TDI...-25.../MS are employed to measure and monitor volume flow of liquids.
Areas of application:

– Medicine technology

– Pharmaceutical Industry

– Chemical Industry

– Research and Development

Features

The rotors of the series TDH...-25.../MS are equipped with magnets and a Hall-sensor detects the rotation of the rotor.
The rotors of the series TDI...-25.../MS are equipped with Stainless Steel-pins and an inductive proximity switch detects the rotation.
Further characteristics of both series are:

– Large measuring range

– Saphire/PA-seating

– High accuracy

– Outputs (alternatively): frequency-, analog- or switch output

– Sturdy Brass-Version

Installation hints

The installation of the flowmeter can be done in any way in the system. The flow direction must be observed.

The flowmeter must not be used as a supporting part in a pipe construction.

The medium must not contain any solids! We recommend the installation of a strainer.

External magnetic fields influence the measurement. Keep sufficient distance to magnetic fields (e.g. electromotors).

The operating instructions for TDH...-25.../MS and TDI...-25/...MS must be observed under any circumstances.

TD -25 /MS 1 0002 04-07 E M

Technical data

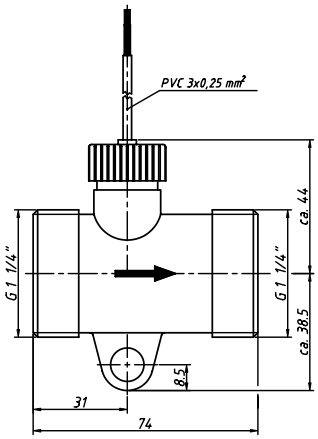

TDHK-25I/MS

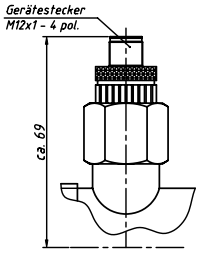

TDIS-25I/MS

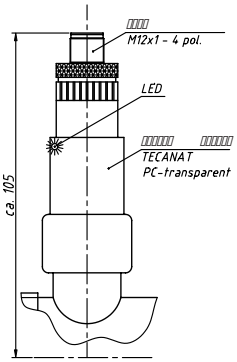

TDHS-25S/MS

TDHS-25SI/MS

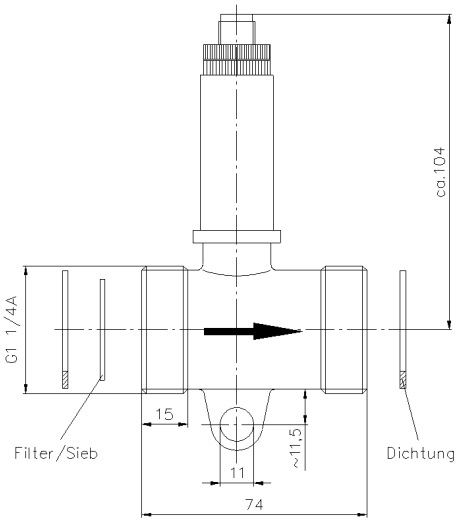

TDHS-25A/MS

Versions					
	Measuring value sensing		Output		
Type	Hall-Sensor	Inductive proximity switch	Impulse output (see page 3)	Analog output (see page 4)	Switch output (see page 4)
TDHK-25I/MS	▲		▲		
TDIS-25I/MS		▲	▲		
TDHS-25S/MS	▲				▲
TDHS-25SI/MS	▲		▲		▲
TDHS-25A/MS	▲			▲	

Technical data		
	Units with hall-sensor TDH...	**Units with inductive proximity switch TDI...**
Process connection:	G 1 1/4” male thread	
	Additional connection fitting absolutely necessary	
Nominal size:	DN 25	
Max. medium temperature:	85 °C	60 °C
Nominal pressure:	PN 10	
Range:	4 - 160 l/min, at continous load max 80 l/min	
Start of signal output:	1 l/min	
Max. size of solids in medium:	0,5 mm	
Electric connection:		
Cable connection (TDHK...)	2 m shielded PVC-cable	—
	T_{max} = 75 °C	—
Plug (TDHS... or TDIS...)	4-Pin-Plug M12x1	4-Pin-Plug M12x1
Power supply (Pulse output):	4,5...24 VDC	12...24 VDC
Ingress protection:	IP 54	
Electric output:	see pages 3 and 4	
Options:		
Strainer	Screen strainer, screen aperture size 0,63 mm	

Materials, Technical data, Signal output

Materials	Contact with medium	Units with Hall-Sensor TDH...	Units with inductive proximity sensor TDI...
Measuring tube	**yes**	Brass (CuZn36Pb2As)	
Turbine chamber	**yes**	PA Grivory HTV4X1	
Impeller	**yes**	PP	
Impeller magnets	**yes**	Permanent magnets, Recona 28 nickel-plated	Stainless Steel 1.4571
Axle	**yes**	Stainless Steel 1.4436	
Bearing	**yes**	Saphir / PA	
Sensor bushing	**yes**	POM Delrin 100 P	
O-Ring	**yes**	72 NBR 872	
Strainer (optional)	**yes**	Stainless Steel 1.4301 (according O-Ring: 70 EPDM 281)	

Technical data impulse output (TDHK-25l/MS, TDIS-25l/MS)	Units with Hall-Sensor TDH...	Units with inductive proximity sensor TDI...
Accuracy:	± 3 % of range	
Repeatability:	± 0,5 %	
Output signal:		
Pulse rate / K-factor	65 Pulses / Liter	
Resolution	15 ml / Pulse	
Signal form	square wave	square wave
	NPN open collector	PNP open collector
Signal current	max. 100 mA	max. 10 mA
Diagram of connection	A1 (see below)	B1 (see below)
Start of signal output:	1 l/min	

Pulse rate [1/l]

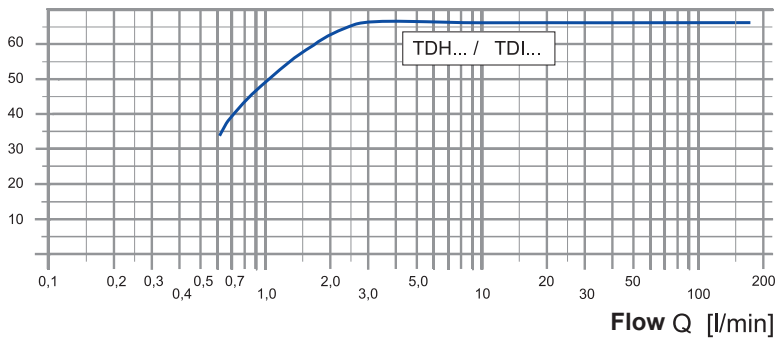

A1: TDHK-25l/MS (Cable)

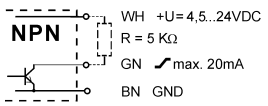

B1: TDIS-25l/MS (PNP, Plug)

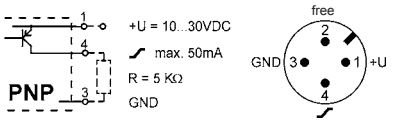

Pressure drop Δp [bar]

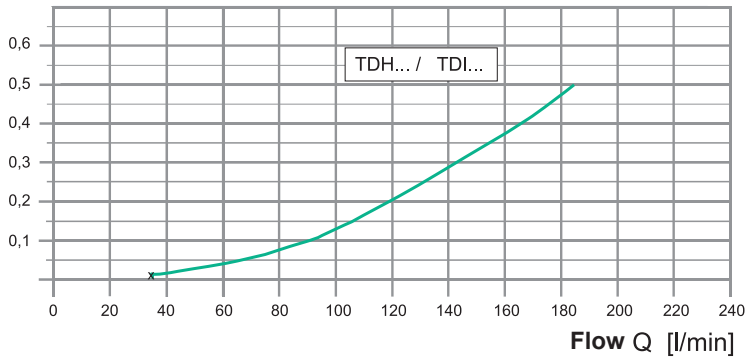

BK = black BN = brown
BU = blue GN = green
WH = white

TD -25 /MS 3 0002 01-09 E M

Electric output

Technical data analog output (TDHS-25A/MS)				
Accuracy:	± 3% of range			
Repeatability:	± 0,5%			
Output signal:	4...20 mA			
Current limit:	approx. 26 mA			
Scale:				
(Please state with order)	0...60 l/min	0...100 l/min	0...160 l/min	
Power supply:	18...30 VDC			
Max. current consumption:	30 mA			
Max. ohmic resistance:	250 Ω against GND			
Residual ripple:	0,2 mA $_{SS}$ through whole scale			
Design:	3-way, galvanically not insulated			
	Combined GND of supply voltage and output signal			
Electric connection:	4-Pin Plug, M12x1			
Ingress protection:	IP 54			
Diagram of connection:	C1			
Max. medium temperature:	80 °C			
Material measuring transducer housing:	Brass			

Technical data Switch output (TDHS-25S/MS) / Switch output + Pulse output (TDHS-25SI/MS)																
Switch point setup:	by rotary switch															
Switch point table:																
Switch position	**0**	**1**	**2**	**3**	**4**	**5**	**6**	**7**	**8**	**9**	**A**	**B**	**C**	**D**	**E**	**F**
Switch point increasing flow [l/min]	**3**	**5**	**6**	**8**	**10**	**12**	**15**	**18**	**20**	**25**	**30**	**35**	**40**	**50**	**70**	**100**
Switch point decreasing flow [l/min]	**5**	**7**	**8**	**10**	**12**	**14**	**17**	**20**	**22**	**27**	**33**	**38**	**44**	**55**	**75**	**105**
Accuracy:	± 0,8 l/min ±4 % of selected switch point															
Output:																
TDHS-25S/MS																
(Switch output only)	potential free contact, opens below setpoint															
	contact rating max. 125 VAC/DC, 100 mA															
TDHS-25SI/MS																
(Switch output + Pulse output)	Switch output switches against supply voltage															
	contact rating max. 100 mA															
	Impulse output delivers flow proportional frequency signal															
	NPN open collector, max. 10 mA															
Power supply:	12...24 VDC															
Current input:	max. 25 mA															
Ingress protection:	IP 54 with closed hull and attached cable box															
Indication, internal:	LED yellow = ok, LED red = alarm															
Electric connection:	4-Pin Plug, M12x1															
Diagram of connection:	D1 and D2 (see below)															
Max. medium temperature:	80 °C															
Housing material:	Plastic PA, transparent															

TD -25 /MS 4 0003 07-10 E M

C1: TDHS-25A/MS

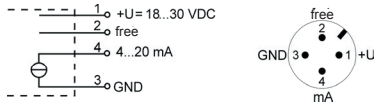

D1: TDHS-25S/MS

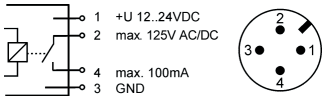

D2: TDHS-25SI/MS

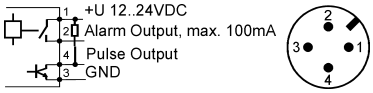

meister strömungstechnik gmbh
Im Gewerbegebiet 2
63831 Wiesen
Germany
Tel.: +49 (0) 6096 / 97 20 - 0
Fax: +49 (0) 6096 / 97 20 - 30
E-Mail: Info@meister-flow.com
Internet: www.meister-flow.com

Flowmeter

TDH...-25.../PP

Function

The flowmeters type TDH...-25.../PP are turbine flowmeters.

Application

The turbine flowmeters type TDH...-25.../PP are employed to measure and monitor volume flow of liquids.
Areas of application:

– Medicine technology

– Pharmaceutical Industry

– Chemical Industry

– Research and Development

Features

The rotors of the series TDH...-25.../PP are equipped with magnets and a Hall-sensor detects the rotation of the rotor.
Further characteristics of the series are:

– Large measuring range

– Saphire/PA-seating

– High accuracy

– Outputs (alternatively): frequency-, analog- or switch output

– PP-Version

Installation hints

The installation of the flowmeter can be done in any way in the system. The flow direction must be observed.

The flowmeter must not be used as a supporting part in a pipe construction.

The medium must not contain any solids! We recommend the installation of a strainer.

External magnetic fields influence the measurement. Keep sufficient distance to magnetic fields (e.g. electromotors).

The operating instructions for TD...-25.../PP must be observed under any circumstances.

TD -25 /PP 1 0002 04-07 E M

Technical Data

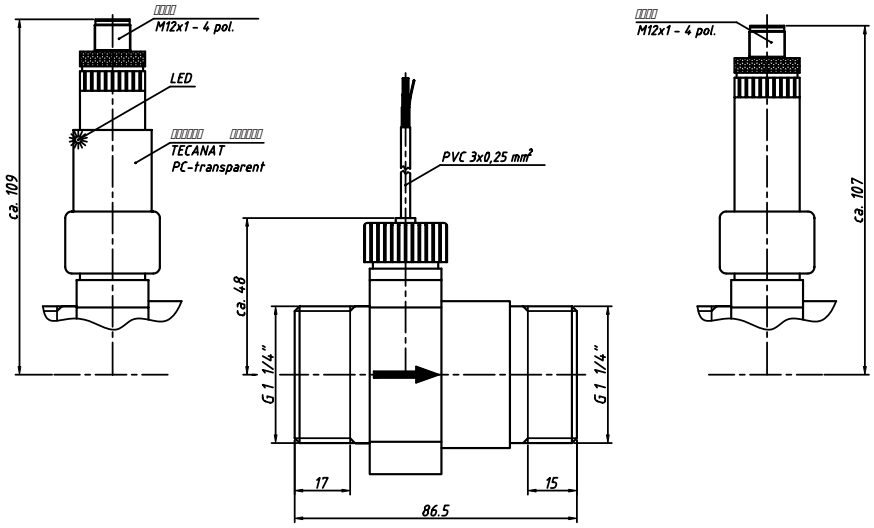

TDHS-25S/PP TDHK-25I/PP TDHS-25A/PP

TDHS-25SI/PP

Versions					
	Measuring value sensing		Output		
Type	Hall-Sensor	Inductive proximity switch	Impulse output (see page 3)	Analog output (see page 4)	Switch output (see page 4)
TDHK-25I/PP	▲		▲		
TDHS-25A/PP	▲			▲	
TDHS-25S/PP	▲				▲
TDHS-25SI/PP	▲		▲		▲

Technical data				
	Units with hall-sensor TDH...			
Process connection:	G 11/4” male thread			
Nominal size:	DN 25			
Max. medium temperature:	30 °C at 10 bar	60 °C at 5 bar	80 °C at 2 bar	
Nominal pressure:	PN 10 (see max. medium temperature)			
Range:	4 - 160 l/min, at continous load max 80 l/min			
Start of signal output:	1 l/min			
Max. size of solids in medium:	0,5 mm			
Electric connection:				
Cable connection (TDHK...)	2 m shielded PVC-cable			
	T_{max} = 75 °C			
Plug (TDHS...)	4-Pin-Plug M12x1			
Power supply (Pulse output):	4,5...24 VDC			
Ingress protection:	IP 54			
Electric output:	see pages 3 and 4			
Options:				
Strainer	Screen strainer, screen aperture size 0,63 mm			

TD -25 /PP 2 0001 04-05 E M

Materials, Technical data, Signal output

Materials		
	Contact with medium?	**Units with Hall-Sensor TDH...**
Measuring tube	**yes**	PP
Turbine chamber	**yes**	PA Grivory HTV4X1
Impeller	**yes**	PP
Impeller magnets	**yes**	Permanent magnets, Recona 28 nickel-plated
Axis	**yes**	Stainless Steel 1.4436
Bearing	**yes**	Saphir / PA
Sensor bush	**yes**	POM Delrin 100 P
O-Ring	**yes**	72 NBR 872
Strainer (option)	**yes**	Stainless Steel 1.4301 (according O-Ring: 70 EPDM 281)

Technical data impulse output (TDHK-25l/PP)	
	Units with Hall-Sensor TDH...
Accuracy:	± 3 % of range
Repeatability:	± 0,5 %
Output signal:	
Pulse rate / K-factor	65 Pulses / Liter
Resolution	15 ml / Pulse
Signal form	square wave
	NPN open collector
Signal current	max 100 mA
Diagram of connection	A1 (see below)
Start of signal output:	1 l/min

Pulse rate [1/l]

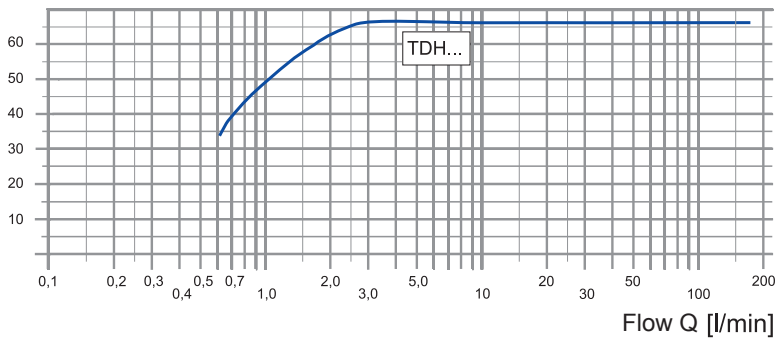

A1: TDHK-25l/PP (Cable)

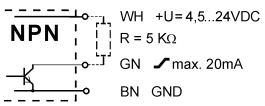

BK = black BN = brown
BU = blue GN = green
WH = white

Pressure drop Δp [bar]

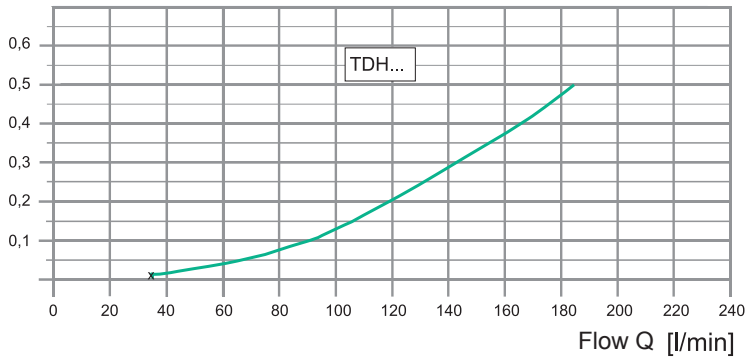

TD -25 /PP 3 0002 01-09 E M

Electric output

Technical data analog output (TDHS-25A/PP)				
Accuracy:	± 3% of range			
Repeatability:	± 0,5%			
Output signal:	4...20 mA			
Current limit:	approx. 26 mA			
Scale:				
(Please state with order)	0...60 l/min	0...100 l/min	0...160 l/min	
Power supply:	18...30 VDC			
Max. current consumption:	30 mA			
Max. ohmic resistance:	250 Ω against GND			
Residual ripple:	0,2 mA $_{SS}$ through whole scale			
Design:	3-way, galvanically not insulated			
	Combined GND of supply voltage and output signal			
Electric connection:	4-Pin Plug, M12x1			
Ingress protection:	IP 54			
Diagram of connection:	B1			
Max. medium temperature:	30 °C at 10 bar	60 °C at 5 bar	80 °C at 2 bar	
Material measuring transducer housing:	Plastic PA			

Technical data Switch output (TDHS-25S/PP) / Switch output + Pulse output (TDHS-25SI/PP)																
Switch point setup:	by rotary switch															
Switch point table:																
Switch position	**0**	**1**	**2**	**3**	**4**	**5**	**6**	**7**	**8**	**9**	**A**	**B**	**C**	**D**	**E**	**F**
Switch point increasing flow [l/min]	**3**	**5**	**6**	**8**	**10**	**12**	**15**	**18**	**20**	**25**	**30**	**35**	**40**	**50**	**70**	**100**
Switch point decreasing flow [l/min]	**5**	**7**	**8**	**10**	**12**	**14**	**17**	**20**	**22**	**27**	**33**	**38**	**44**	**55**	**75**	**105**
Accuracy:	± 0,8 l/min ±4 % of selected switch point															
Output:																
TDHS-25S/PP																
(Switch output only)	potential free contact, opens below setpoint															
	contact rating max. 125 VAC/DC, 100 mA															
TDHS-25SI/PP																
(Switch output + Pulse output)	Switch output switches against supply voltage															
	contact rating max. 100 mA															
	Impulse output delivers flow proportional frequency signal															
	NPN open collector, max. 10 mA															
Power supply:	12...24 VDC															
Current input:	max. 25 mA															
Ingress protection:	IP 54 with closed hull and attached cable box															
Indication, internal:	LED yellow = ok, LED red = alarm															
Electric connection:	4-Pin Plug, M12x1															
Diagram of connection:	C1 and C2 (see below)															
Max. medium temperature:	30 °C at 10 bar	60 °C at 5 bar	80 °C at 2 bar													
Housing material:	Plastic PA, transparent															

TD -25 /PP 4 0002 04-07 E M

B1: TDHS-25A/PP

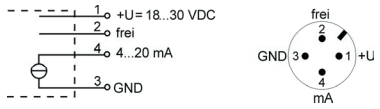

C1: TDHS-25S/PP

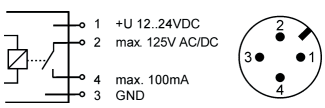

C2: TDHS-25SI/PP

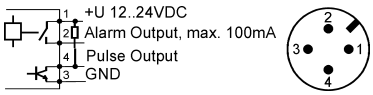

meister strömungstechnik gmbh
Im Gewerbegebiet 2
63831 Wiesen
Germany
Tel.: +49 (0) 6096 / 97 20 - 0
Fax: +49 (0) 6096 / 97 20 - 30
E-Mail: Info@meister-flow.com
Internet: www.meister-flow.com

Flowmeter

TDH...-40.../MS
TDI...-40.../MS

Function

The flowmeters type TDH...-40.../MS and TDI...-40.../MS are turbine flowmeters.

Application

The turbine flowmeters type TDH...-40.../MS and TDI...-40.../MS are employed to measure and monitor volume flow of liquids.

Areas of application:

– Research and development

– Mechanical engineering

– Plant construction

Features

The rotors of the series TDH...-40.../MS are equipped with magnets and a Hall-sensor detects the rotation of the rotor.
The rotors of the series TDI...-40.../MS are equipped with stainless steel-pins and an inductive proximity switch detects the rotation.
Further characteristics of both series are:

– Large measuring range

– Saphire/PA-seating

– High accuracy

– Outputs (alternatively): frequency-, analog- or switch output

– Sturdy brass-version

– Integrated strainer

Installation hints

The installation of the flowmeter can be done in any orientation in the system. The flow direction must be observed.

The flowmeter must not be used as a supporting part in a pipe construction.

The medium must not contain any solids!

External magnetic fields influence the measurement. Keep sufficient distance to magnetic fields (e.g. electromotors).

The operating instructions for TDH...-40.../MS and TDI...-40.../MS must be observed under any circumstances.

TD -40 /MS 1 0002 04-07 E M

Technical data

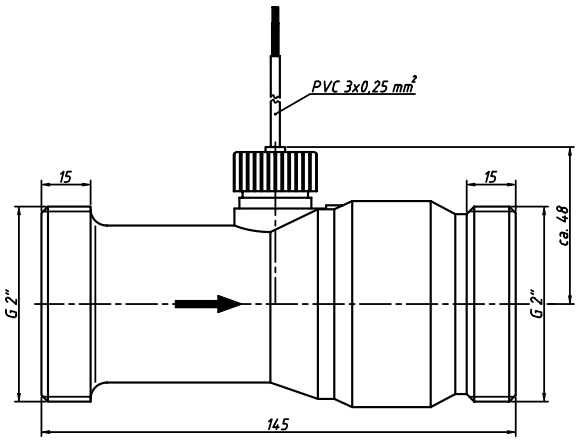

TDHK-40I/MS

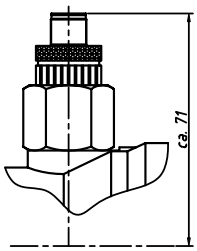

TDIS-40I/MS

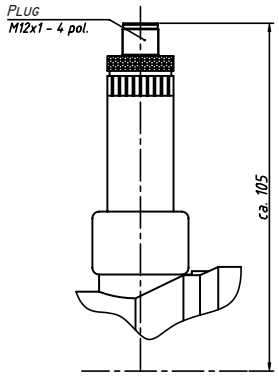

TDHS-40A/MS

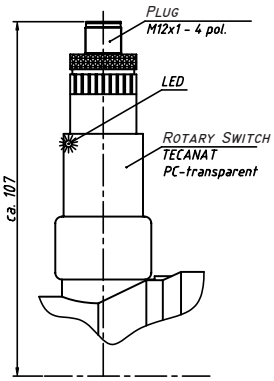

TDHS-40S/MS

TDHS-40SI/MS

Versions

Type	Sensing method		Output		
	Hall-Sensor	Inductive proximity switch	Impulse output (see page 3)	Analog output (see page 4)	Switch output (see page 4)
TDHK-40I/MS	▲		▲		
TDIS-40I/MS		▲	▲		
TDHS-40A/MS	▲			▲	
TDHS-40S/MS	▲				▲
TDHS-40SI/MS	▲		▲		▲

Technical data

	Units with Hall-Sensor TDH...	**Units with inductive proximity switch TDI...**
Process connection:	G 2” male thread	
	Additional connection fitting recommended!	
Nominal size:	DN 40	
max. medium temperature:	85 °C	60 °C
Nominal pressure:	PN 10	
Range:	6,7 - 417 l/min (0,4...25 m³/h)	
Start of signal output:	0,1 m³/h	
max. size of solids in medium:	0,5 mm	
Electric connection:		
Cable connection (TDHK...)	2 m shielded PVC-cable	—
	T_{max} = 75 °C	—
Plug (TDHS... or TDIS...)	4-Pin-Plug M12x1	4-Pin-Plug M12x1
Power supply (Pulse output):	4,5...24 VDC	12...24 VDC
Ingress protection:	IP 54	
Electric output:	see pages 3 and 4	
Integrated strainer:	plain strainer, screen aperture size 0,63 mm	

TD -40 /MS 2 0001 06-05 E M

Materials, technical data, signal output

Materials	Wetted part?	Units with Hall-sensor TDH...	Units with inductive proximity switch TDI...
Measuring tube	**yes**	brass (CuZn36Pb2As)	
Turbine chamber	**yes**	PA Grivory HTV4X1	
Impeller	**yes**	PP	
Impeller magnets	**yes**	permanent magnets, nickel-plated Recona 28	stainless steel 1.4571
Axis	**yes**	stainless steel 1.4436	
Bearing	**yes**	saphire / PA	
Sensor bush	**yes**	POM Delrin® 100 P	
O-ring	**yes**	72 NBR 872	
Flow straightening cone	**yes**	POM Celcom	
Strainer	**yes**	stainless steel 1.4301	
Guard ring	**yes**	bronze 2.1030.34	

Technical data impulse output (TDHK-40I/MS, TDIS-40I/MS)	Units with Hall-sensor TDH...	Units with inductive proximity switch TDI...
Accuracy:		
0,4... 3 m³/h	± 5 % of range	
3 ...25 m³/h	± 3 % of range	
Repeatability:	± 0,5 %	
Output signal:		
Pulse rate	26,6 Pulses / Liter	
Resolution	37,6 ml / Pulse	
Signal form	square wave	square wave
	NPN open collector	PNP open collector
Signal current	max. 100 mA	max. 10 mA
Connection diagram	A1 (see below)	B1 (see below)
Start of signal output:	0,1 m³/h	

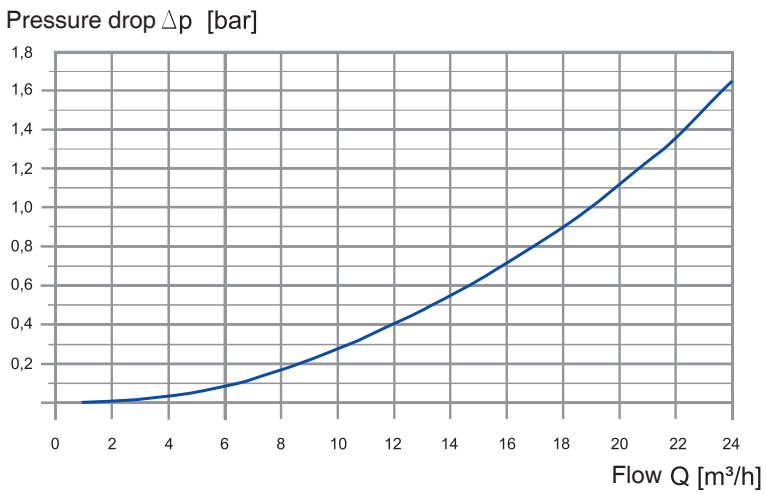

A1: TDHK-40I/MS (Cable)

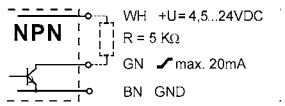

B1: TDIS-40I/MS (PNP, Plug)

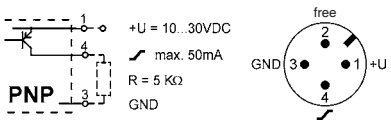

BK = black BN = brown
BU = blue GN = green
WH = white

TD -40 /MS 3 0001 06-05 E M

Electric output

Technical data analog output (TDHS-40A/MS)			
Accuracy:			
0,4... 3 m³/h	± 5 % of range		
3 ...25 m³/h	± 3 % of range		
Repeatability:	± 0,5%		
Output signal:	4...20 mA		
Current limit:	approx. 26 mA		
Range:			
(Please state with order)	0...150 l/min	0...250 l/min	0...400 l/min
Power supply:	18...30 VDC		
max. current consumption:	30 mA		
max. load:	250 Ω against GND		
Residual ripple:	0,2 mA $_{SS}$ through whole scale		
Design:	3-way, galvanically not insulated		
	combined GND of supply voltage and output signal		
Electric connection:	4-Pin Plug, M12x1		
Ingress protection:	IP 54		
Connection diagram:	C1		
max. medium temperature:	80 °C		
Measuring transducer housing material:	plastic PA		

Technical data Switch output (TDHS-40S/MS) / Switch output + Pulse output (TDHS-40SI/MS)																
Switch point setup:	by rotary switch															
Switch point table:																
Switch point	**0**	**1**	**2**	**3**	**4**	**5**	**6**	**7**	**8**	**9**	**A**	**B**	**C**	**D**	**E**	**F**
Switch point decreasing flow [l/min]	**7**	**10**	**15**	**20**	**25**	**30**	**35**	**40**	**50**	**65**	**80**	**100**	**130**	**160**	**200**	**275**
Switch point increasing flow [l/min]	**10**	**13**	**19**	**24**	**30**	**35**	**40**	**47**	**58**	**75**	**90**	**115**	**150**	**190**	**230**	**310**
Accuracy:	± 2,0 l/min ±6 % of selected switch point															
Output:																
TDHS-40S/MS																
(Switch output only)	potential free contact, opens below setpoint															
	contact rating max. 125 VAC/DC, 100 mA															
TDHS-25SI/PPO																
(Switch output + Pulse output)	switch output switches against supply voltage															
	contact rating max. 100 mA															
	impulse output delivers flow proportional frequency signal															
	NPN open collector, max. 10 mA															
Power supply:	12...24 VDC															
Current input:	max. 25 mA															
Ingress protection:	IP 54 with closed hull and attached cable box															
Indication, internal:	LED yellow = ok, LED red = alarm															
Electric connection:	4-Pin Plug, M12x1															
Connection diagram:	D1 and D2 (see below)															
max. medium temperature:	80 °C															
Housing material:	plastic PA, transparent															

TD -40 /MS 4 0001 06-05 E M

C1: TDHS-40A/MS

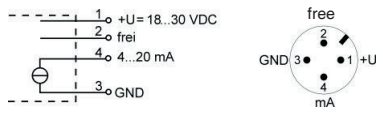

D1: TDHS-40S/MS

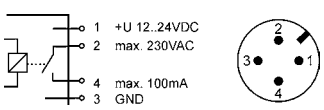

D2: TDHS-40SI/MS

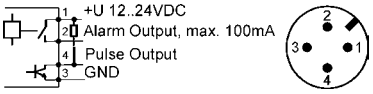

meister strömungstechnik gmbh
Im Gewerbegebiet 2
DE - 63831 Wiesen
Tel.: +49 (0) 6096 / 97 20 - 0
Fax: +49 (0) 6096 / 97 20 - 30
E-Mail: Info@meister-flow.com
Internet: www.meister-flow.com

Flow indicator

KAA

Operation

The KAA flow indicators are rising ball visual indicators. The flow lifts a Teflon® ball out of his base position. The ball rises depending on the flow and finally becomes full visible.

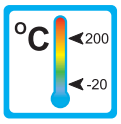

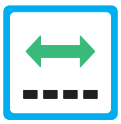

Application

The KAA flow indicators are used to indicate flow of liquid media. The glass visualizes colour changes and changes of media conditions. The flow indicators are for example used in following areas:

– Cooling systems

– Engineering

– Water treatment

– Medical industry

– Research and development

Features

The KAA series proves itself through reliable function and easy handling. Further characteristics of this type are:

– Large indication range

– High chemical resistance (stainless steel-version)

– High temperature durability

– Special threads on request

Installation hints

The KAA flow indicators must be mounted horizontal with the sight glass on top. The flow direction must be observed.

The flow monitor must not be used as a supporting part in a pipe construction!

The medium must not contain any solid particles!
We recommend the installation of strainers type SFD or SFM!

KAA 1 0002 05-06 E M

Technical Data

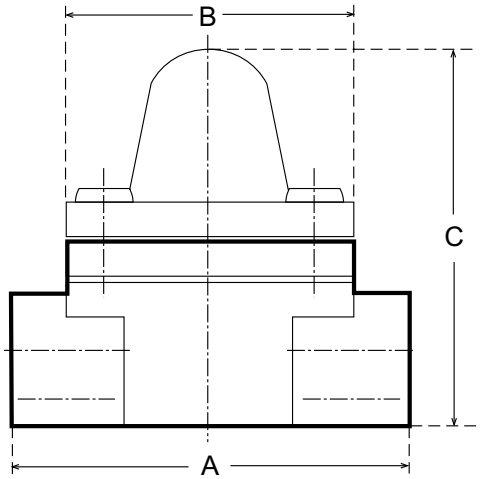

Summary of types KAA

Type	Flowrate (H_2O) min. [l/min]	ball visible [l/min]	max. (recommended) [l/min]	Pressure drop (at v = 2 m/s) [bar]	DN [mm]	G	A [mm]	B [mm]	C [mm]	Weight [kg]
KAA-8	0,1	1,0	6	0,13	8	1/4"	76	63	79	0,72
KAA-10	0,1	1,0	10	0,16	10	3/8"	76	63	79	0,69
KAA-15	0,1	1,0	20	0,19	15	1/2"	76	63	79	0,65
KAA-20	2,4	5,2	40	0,16	20	3/4"	89	63	95	1,30
KAA-25	2,7	5,5	60	0,40	25	1"	89	63	95	1,25
KAA-32	11,0	16,0	100	0,20	32	1 1/4"	117	75	125	2,50
KAA-40	16,0	21,0	150	0,23	40	1 1/2"	117	75	125	2,35

NPT-thread on request

Operating data	**KAA**
Operating pressure max.:	PN 16 bar
Operating temperature max.:	200 °C
Pressure drop:	see summary of types
Material	**Stainless steel-version**
Body:	stainless steel 1.4408
Clamp ring:	stainless steel
Ball:	PTFE
Sight glass:	Borosilikat
O-ring:	Viton®
Gaskets:	Klingersil® (C-4400)
Screws:	stainless steel

KAA 2 0003 07-09 E M

meister strömungstechnik gmbh
Im Gewerbegebiet 2
63831 Wiesen
Germany
Tel.: +49 (0) 6096 / 97 20 - 0
Fax: +49 (0) 6096 / 97 20 - 30
E-Mail: Info@meister-flow.com
Internet: www.meister-flow.com

SPM

- low sensitivity to dirt
- high switch rating
- low pressure drop

06

SPM-L

- low sensitivity to dirt
- high switch rating
- low pressure drop

06

SPKM

- low sensitivity to dirt
- low pressure drop
- threaded connection

06

SPKR

- low sensitivity to dirt
- low pressure drop
- threaded connection

06

DP-65

target-disc-flowmeter
- high reliability
- high temperatures
- sandwich mounting

06

Overview

Flow Monitor

SPM

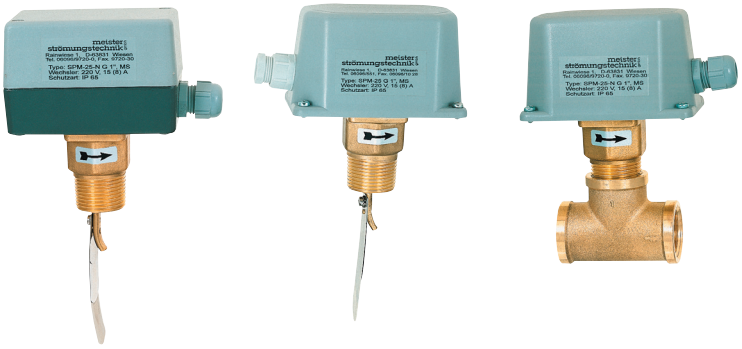

Operation

The flow monitors type SPM
are paddle switches

Application

The flow monitors type SPM are used for monitoring volumeflow of liquid media in pipe constructions and open ducts.

Areas of application:

– Coolingsystems and cooling-circuits

– Heating and air-conditioning systems

– Research and development

Features

The SPM series proves itself through reliable function and easy handling.
A bellow separates the electrical and the wetted part of the SPM.
All instruments without a T-piece are supplied with four separate paddles, which can be combined.
The choice of the combination is determined by the pipe diameter (refer to table 3 on page 2).
If necessary the paddles have to be shortened according to pipe size.

Further characteristics of this sturdy type are:

– low sensitivity to dirt

– high contact rating

– easy installation

– low pressure drop

Hints

The installation of the flow monitor can be done in any way in the system. The flow direction must be observed.
Flow-straightening sections of at least 5x the pipe diameter should be considered up- and down-stream of the SPM.
The switchpoint must be re-adjusted for vertical installation to compensate the paddle weight.
If the monitor is installed upside down, it must be observed that no deposits can clog the bellow!

The flow monitor must not be used as a supporting part in a pipe construction!

SPM 1 0001 11-04 E M

Technical Data

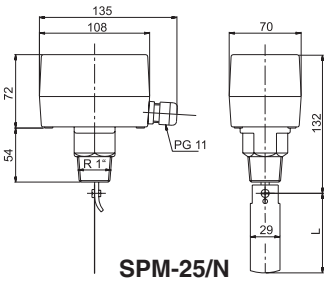

SPM-25/N

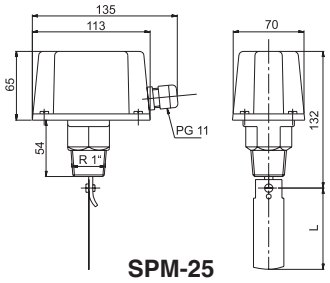

SPM-25

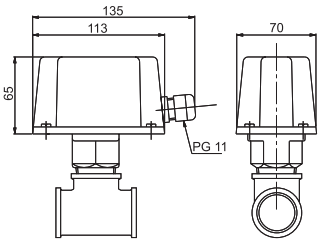

SPM-20

Connection diagram

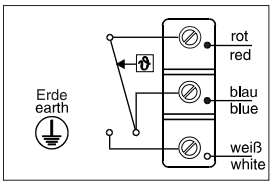

red: common

blue: N. C. (Normally closed)

white: N. O. (Normally open)

For switch values refer to table 3.
The instruments are factory adjusted for minimum switch values.
By turning the spanscrew clockwise the switch values can be increased (refer to operating instruction).

Table 1: Overview

Type	Pipe size	p_{max} [bar]	Material
SPM-15	1/2"	11	Brass
SPM-20	3/4"	11	Brass
SPM-25	1" - 8"	11	Brass
SPM-25 VA	1" - 8"	30	SS: 316L
SPM-25T*	1" - 8"	11	Brass
SPM-25/N	1" - 8"	11	Brass
SPM-25/N VA	1" - 8"	30	SS: 316L
SPM-25R	1" - 8"	11	Brass
SPM-25R VA	1" - 8"	30	SS: 316L
SPM-25R/N	1" - 8"	11	Brass
SPM-25R/N VA	1" - 8"	30	SS: 316L

* SPM-25T is TÜV certified

Table 2: Paddle lengths and paddle material

Paddle	Length L		Material
1	standard (as of DN 50):	28,5 mm	SS: 316
	with DN 25 the paddle must be cut to size		
2	standard:	54,5 mm	SS: 316
3	standard:	83,5 mm	SS: 316
4	standard (ab DN 175):	162,5 mm	SS: 316
	*Special length for DN 100:	92,0 mm	
	*Special length for DN 125:	117 mm	
	*Special length for DN 150:	143 mm	

*By shorten the standard paddle, the user can obtain the special lengths

Table 3: Switch values for H_2O

Types: SPM-15 (with T-piece), SPM-20 (with T-piece)						
Type	Connection				switch-off value [l/h]	switch-on value [l/h]
SPM-15	1/2"				174 - 846	480 - 948
SPM-20	3/4"				138 - 768	408 - 858
Types: SPM-25, SPM-25 VA, SPM-25T, SPM-25/N, SPM-25/N VA						
DN	fitted paddle				switch-off value [m³/h]	switch-on value [m³/h]
25	1				0,6 - 2,0	1,0 - 2,1
32	1				0,8 - 2,8	1,3 - 3,0
40	1				1,1 - 3,7	1,7 - 4,0
50	1	2			2,2 - 5,7	3,1 - 6,1
65	1	2			2,7 - 6,5	4,0 - 7,0
80	1	2	3		4,3 - 10,7	6,2 - 11,4
100	1	2	3		11,4 - 27,7	14,7 - 29,0
100	1	2	3	4	6,1 - 17,3	8,0 - 18,4
125	1	2	3		22,9 - 53,3	28,4 - 55,6
125	1	2	3	4	9,3 - 25,2	12,9 - 26,8
150	1	2	3		35,9 - 81,7	43,1 - 85,1
150	1	2	3	4	12,3 - 30,6	16,8 - 32,7
200	1	2	3		72,6 - 165,7	85,1 - 172,5
200	1	2	3	4	38,6 - 90,8	46,5 - 94,2
Types: SPM-25R, SPM-25R VA, SPM-25R/N, SPM-25R/N VA						
DN	fitted paddle				switch-off value [m³/h]	switch-on value [m³/h]
25	1				0,2 - 1,0	0,6 - 1,1
32	1				0,25 - 1,4	0,9 - 1,6
40	1				0,5 - 1,9	1,2 - 2,2
50	1	2			0,9 - 3,6	2,3 - 4,1
65	1	2			1,2 - 4,9	3,1 - 5,5
80	1	2	3		2,1 - 7,4	4,9 - 8,2
100	1	2	3		4,9 - 17,1	11,3 - 19,1
100	1	2	3	4	3,3 - 11,6	7,7 - 13,0
125	1	2	3		9,7 - 34,0	22,4 - 37,9
125	1	2	3	4	5,0 - 17,5	11,5 - 19,6
150	1	2	3		13,6 - 47,6	31,5 - 53,2
150	1	2	3	4	6,1 - 21,4	14,1 - 23,9
200	1	2	3		25,7 - 90,1	59,6 - 100,7
200	1	2	3	4	21,7 - 55,3	36,5 - 61,8

SPM 2 0001 11-04 E M

Technical Data

Housing:	Galvanized steel bottom plate with ABS-Cover; Ingress protection: IP 65		
optional (SPM-.../N):	Painted aluminium bottom housing with ABS-Cover; Ingress Protection: IP 65		
Contact:	Dust tight micro switch	switch values:	15 (8) A, 24 - 250 V AC
optional:	Gold contacts on request		
Medium temperature:	-20 °C to 120 °C	Ambient temperature max.:	85 °C

meister strömungstechnik gmbh
Im Gewerbegebiet 2
DE - 63831 Wiesen
Tel.: +49 (0) 6096 / 97 20 - 0
Fax: +49 (0) 6096 / 97 20 - 30
E-Mail: Info@meister-flow.com
Internet: www.meister-flow.com

Flow Switch

SPM-L

Operation

The flow switches type SPM-L
are paddle switches

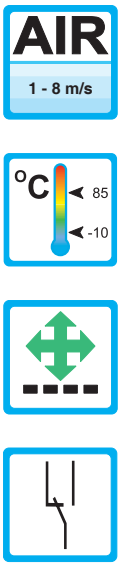

Application

The flow switches type SPM-L are used for monitoring volumeflow of air.

Areas of application:

– Coolingsystems and cooling-circuits

– Heating and air-conditioning systems

– Research and development

Features

The SPM-L series proves itself through reliable function and easy handling.

Further characteristics of this sturdy type are:

– low sensitivity to dirt

– high contact rating

– easy installation

– low pressure drop

Installation hints

The flow switch can be installed horizontally or vertically in the system.
The instrument must not be installed upside down.
The flow direction must be observed.
Flow-straightening sections of at least 5x the pipe diameter should be considered up- and down-stream of the SPM-L.
The switchpoint must be re-adjusted for vertical installation to compensate the paddle weight.
The flow switch must not be used as a supporting part in a pipe construction!

SPM-L 1 0003 08-07 E M

Technical Data

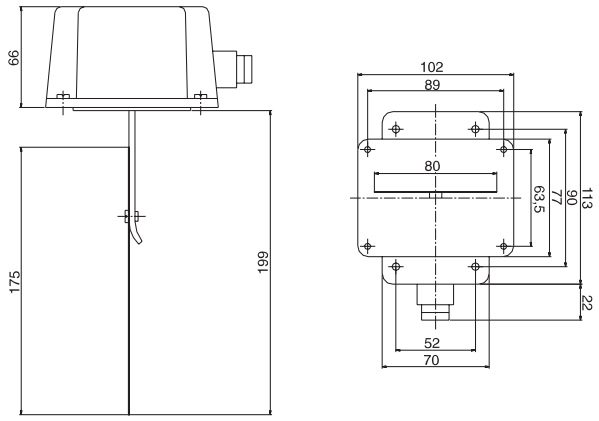

SPM-L

Connection diagram

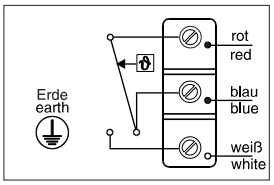

red: common

blue: N. C. (Normally closed)

white: N. O. (Normally open)

For switch values refer to table 1.
The instruments are factory adjusted for minimum switch values.
By turning the spancrew clockwise the switch values can be increased (refer to operating instruction).

Table 1: Switch values for air

Type	switch-off value min. [m/s]	switch-off value max. [m/s]	switch-on value min. [m/s]	switch-on value max. [m/s]
SPM-L	1,0	8,0	2,5	9,2

If the switchpoint is above 5 m/s the paddle has to be cut off at the marking.
Then the lowest switch-off value increases to 2,5 m/s flow velocity.

Technical Data

Housing:	Galvanized steel bottom plate with ABS-Cover; Ingress protection of the external side: IP 65		
Mounting plate:	Brass		
Paddle:	Stainless Steel 1.4310		
Contact:	Dust tight micro switch	Switch values:	15 (8) A, 24 - 250 V AC
optional:	Gold contacts on request		
Medium temperature:	-10 °C to 85 °C	Ambient temperature:	-10 °C to 85 °C

SPM-L 2 0002 02-05 E M

meister strömungstechnik gmbh
Im Gewerbegebiet 2
DE - 63831 Wiesen
Tel.: +49 (0) 6096 / 97 20 - 0
Fax: +49 (0) 6096 / 97 20 - 30
E-Mail: Info@meister-flow.com
Internet: www.meister-flow.com

Flow Monitor

SPKM

Operation

The flow monitors type SPKM are paddle switches with magnetic triggering of a micro switch.

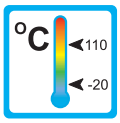

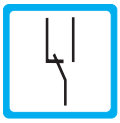

Application

The flow monitors type SPKM are used for monitoring volumeflow of liquid media in pipe constructions and open ducts.

Areas of application:

– Coolingsystems and cooling-circuits

– Heating and air-conditioning systems

– Research and development

Features

The SPKM series proves itself through reliable function and easy handling.
The electrical and the wetted part are hermetically separated.

Further characteristics of this sturdy type are:

– low sensitivity to dirt

– high repeatability

– low pressure drop

– easy switchpoint adjustment

– high contact rating

– threaded connection

Installation hints

The flow monitor can be installed horizontally or vertically in the system.
The instrument must not be installed upside down.
The flow direction must be observed.
Flow-straightening sections of at least 5x the pipe diameter should be considered up- and down-stream of the SPKM.
The switchpoint must be re-adjusted for vertical installation to compensate the paddle weight.
The flow monitor must not be used as a supporting part in a pipe construction!

SPKM 1 0002 09-05 E M

Measuring Ranges, Technical Data

Connection diagram

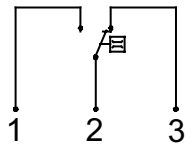

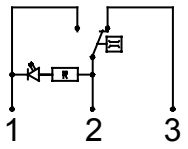

optional: with LED red

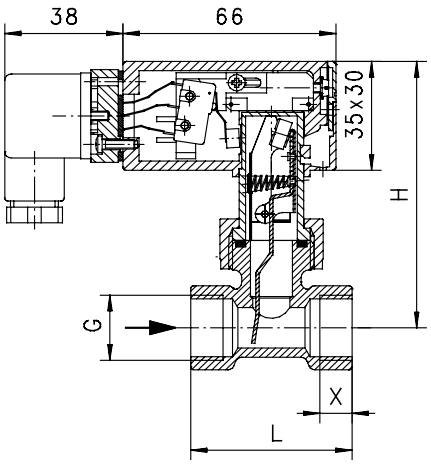

SPKM

Summary of types SPKM

Type	Switch range* (H_2O) [l/min]	Qmax. (H_2O) [l/min]	DN	G	PN [bar]	H [mm]	L [mm]	X [mm]	Weight Brass [kg]	Weight Stainless Steel [kg]
SPKM-10	4 — 5,5	10	10	3/8"	25	87	50	10	0,35	0,40
SPKM-15	5,5 — 7	20	15	1/2"	25	87	50	10	0,35	0,41
SPKM-20	7,5 — 10	40	20	3/4"	25	88	50	12	0,35	0,35
SPKM-25	14 — 18	60	25	1"	25	92	50	12	0,40	0,45
SPKM-32	22 — 30	80	32	1 1/4"	25	96	50	12	0,55	0,55
SPKM-40	37 — 50	100	40	1 1/2"	25	99	50	12	0,60	0,70
SPKM-50	67 — 93	150	50	2"	25	108	50	12	1,00	1,00

*The stated values are switch-off points for horizontal installation. Measuring ranges for other flow media on request!

Operating data	**SPKM**
Operating pressure max. Brass-Version:	25 bar
Operating pressure max. Stainless Steel-Version:	25 bar
Average pressure drop at Qmax.:	0,01 bar
Maximum temperature:	110 °C
Measuring accuracy:	±15% of full scale
Hysteresis:	Depending on switch value, at least 0,7 l/min
Electrical data:	
Change over:	max. 250 V AC • 5 A
Ingress protection:	IP65 (plug connection DIN 43650 Form A)
Output signal:	The contact changes, when the flow falls below the set point.
Power supply:	Not required (micro switch)
Status indication (optional):	LED red (refer to connection diagram)
Gold contact (optional):	125 V AC / 30 V DC • 100 mA
Other plug types on request!	

Material:		**Brass-Version**	**Stainless Steel-Version**
Housing	(wetted part):	MS 58 nickel-plated	1.4305
Body	(wetted part):	MS 58	1.4571
Paddle parts	(wetted part):	1.4301 ; 1.4571	1.4301 ; 1.4571
Spring	(wetted part):	1.4310	1.4310
Magnet	(wetted part):	Oxyd 300	Oxyd 300
Gasket	(wetted part):	NBR	Viton

Please indicate flow direction, flow medium and switch range with your order!

SPKM 2 0002 09-05 E M

meister strömungstechnik gmbh
Im Gewerbegebiet 2
DE - 63831 Wiesen
Tel.: +49 (0) 6096 / 97 20 - 0
Fax: +49 (0) 6096 / 97 20 - 30
E-Mail: Info@meister-flow.com
Internet: www.meister-flow.com

Flow Monitor

SPKR

Operation

The flow monitors type SPKR are paddle switches with magnetic triggering of a reed contact.

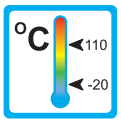

Application

The flow monitors type SPKR are used for monitoring volumeflow of liquid media in pipe constructions and open ducts.

Areas of application:

– Coolingsystems and cooling-circuits

– Heating and air-conditioning systems

– Research and development

Features

The SPKR series proves itself through reliable function and easy handling.
The electrical and the wetted part are hermetically separated.

Further characteristics of this sturdy type are:

– low sensitivity to dirt

– high repeatability

– low pressure drop

– easy switchpoint adjustment

– threaded connection

Installation hints

The flow monitor can be installed horizontally or vertically in the system.
The instrument must not be installed upside down.
The flow direction must be observed.
Flow straightening sections of at least 5x the pipe diameter should be considered up- and down-stream of the SPKR.
The switchpoint must be re-adjusted for vertical installation to compensate the paddle weight.
The flow monitor must not be used as a supporting part in a pipe construction!

SPKR 1 0002 09-05 E M

Measuring Ranges, Technical Data

Connection diagram

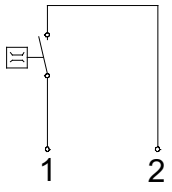

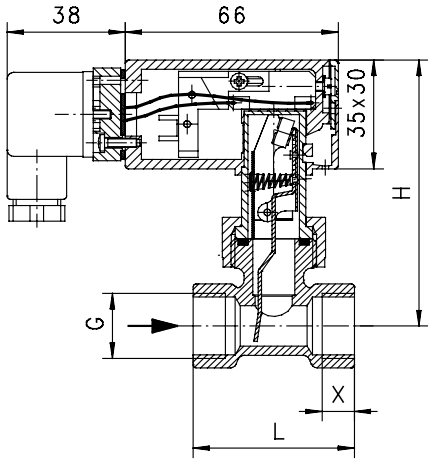

SPKR

Summary of types SPKR

Type	Switch range* (H_2O) [l/min]	Qmax. (H_2O) [l/min]	DN	G	PN [bar]	H [mm]	L [mm]	X [mm]	Weight Brass [kg]	Weight Stainless Steel [kg]
SPKR-10	3,5 — 5	10	10	3/8"	25	87	50	10	0,35	0,40
SPKR-15	5 — 6,5	20	15	1/2"	25	87	50	10	0,35	0,41
SPKR-20	6 — 8,5	40	20	3/4"	25	88	50	12	0,35	0,35
SPKR-25	12 — 15	60	25	1"	25	92	50	12	0,40	0,45
SPKR-32	20 — 27	80	32	1 1/4"	25	96	50	12	0,55	0,55
SPKR-40	34 — 44	100	40	1 1/2"	25	99	50	12	0,60	0,70
SPKR-50	54 — 69	150	50	2"	25	108	50	12	1,00	1,00

*The stated values are switch-off points for horizontal installation. Measuring ranges for other flow media on request!

Operating data	**SPKR**
Operating pressure max. Brass-Version:	25 bar
Operating pressure max. Stainless Steel-Version:	25 bar
Average pressure drop at Qmax.:	0,01 bar
Maximum temperature:	110 °C
Measuring accuracy:	±15% of full scale
Hysteresis:	Depending on switch value, at least 0,7 l/min
Electrical data:	
Normally open:	max. 230 V AC • 1 A • 50 VA
Ingress protection:	IP65 (plug connection DIN 43650 Form A)
Output signal:	The contact opens, when the flow falls below the set point.
Power supply:	Not required (potentialfree reed contacts)
Other plug types on request!	

Material:	**Brass-Version**	**Stainless Steel-Version**
Housing (wetted part):	MS 58 nickel-plated	1.4305
Body (wetted part):	MS 58	1.4571
Paddle parts (wetted part):	1.4301 ; 1.4571	1.4301 ; 1.4571
Spring (wetted part):	1.4310	1.4310
Magnet (wetted part):	Oxyd 300	Oxyd 300
Gaskets (wetted part):	NBR	Viton

Please indicate flow direction, flow medium and switch range with your order!

SPKR 2 0003 03-10 E M

meister strömungstechnik gmbh
Im Gewerbegebiet 2
63831 Wiesen
Germany
Tel.: +49 (0) 6096 / 97 20 - 0
Fax: +49 (0) 6096 / 97 20 - 30
E-Mail: Info@meister-flow.com
Internet: www.meister-flow.com

Flowmeter

DP-65

Operation

The instruments, type DP-65, are target-disc flowmeters

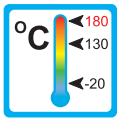

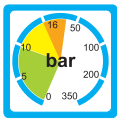

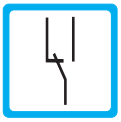

Application

The flowmeters, type DP-65, are employed to monitor the volume flow of liquids.
The instruments are used in many different applications:

– water treatment

– chemical industry

– heating circuits

– pharmaceutical industry

– fire protection installations

Features

The DP-65 prove themselves through reliability and simple handling. Further properties of this sturdy series are:

– suitable for high temperature applications

– product designated scale at no charge

– sandwich mounting

Installation hints

The flowmeter can be installed in any position in the system. The flow direction must be observed (refer to page 3).

The flowmeter must not be used as a supporting part in a pipe construction!

Keep adequate distance to magnetic fields (e.g. electric-motors)!

The operating instruction for DP-65 must be observed!

DP-65 1 0002 08-06 E M

Technical Data

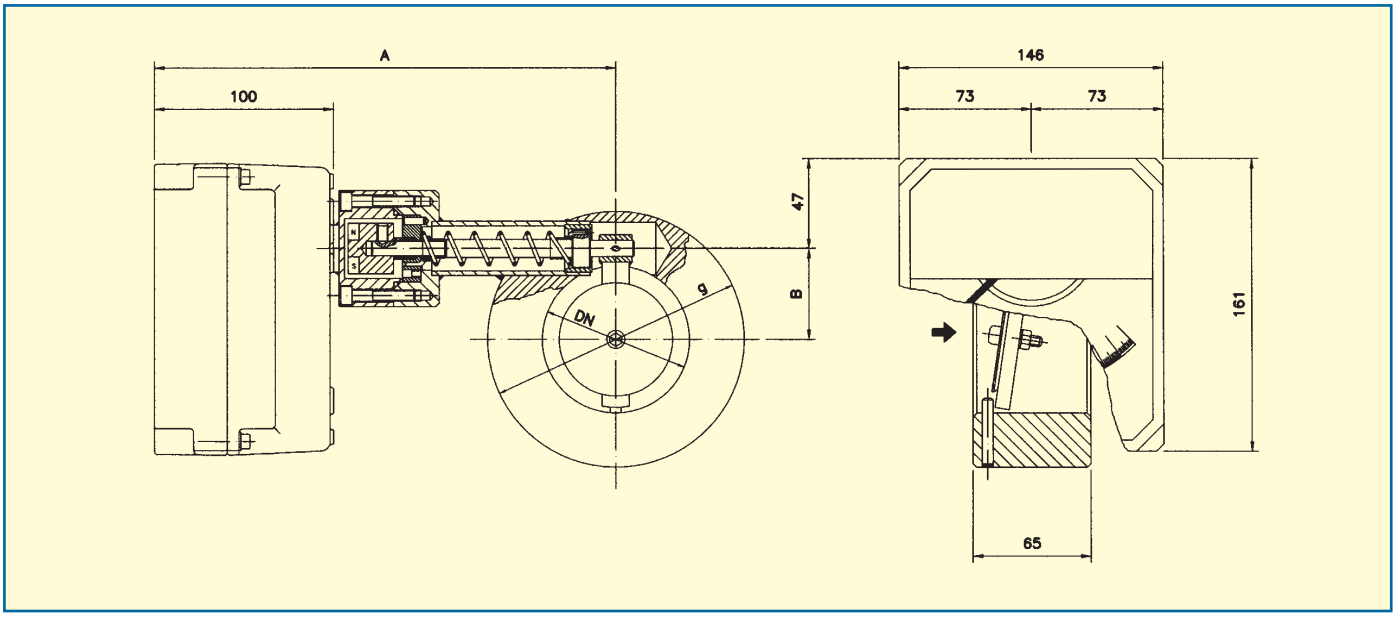

Flow ranges, dimensions and weights

DN	Flow ranges (water at 20 °C)				Dimensions			Weight
	[m³/h]	[m³/h]	[m³/h]	[m³/h]	g	B	A	[kg]
40	0,8 - 4 / 6	1 - 8	2 - 10	3 - 16	88	28	250	5
50	0,8 - 6	2 - 10	3 - 16	3 - 25	102	33	250	6
65	2 - 10	3 - 16	3 - 25	4 - 30	122	40	250	7
80	2 - 16	3 - 25	5 - 40	10 - 60	138	50	250	8
100	5 - 40	8 - 60	10 - 80	12 - 90	158	60	250	10
125	8 - 60	15 - 100	15 - 120	20 - 135	188	70	280	12
150	15 - 100	20 - 160	25 - 200	40 - 220	212	78	280	14
200	20 - 160	30 - 250	40 - 350	—	268	90	320	20
250	25 - 200	50 - 400	60 - 500	80 - 600	320	102	350	29
300	30 - 250	50 - 400	80 - 600	100 - 800	370	115	370	35

Technical data

Measuring ranges:		**Accuracy:**	
Water	refer to table above	standard	± 2,5 % of full scale
		optional	± 1,6 % of full scale
Medium temperature:		**Ambient temperature:**	
Steel coated (beschichtet)	-20 °C to +130 °C	Steel (coated)	-20 °C to +80 °C
Stainless Steel	-20 °C to +180 °C	Stainless Steel	-20 °C to +80 °C
Pressure:			
DN-40 to DN-80	PN40	DN-100 to DN-200	PN16
DN-250 to DN-300	PN10		
Pressure drop	low pressure drop	**Viscosity max.:**	380 cP
Connection (standard):	sandwich mounting		
Scale:	medium customised, 120 mm, various units e.g.: l/h, m³/h, kg/h		
Special versions (on request):			
High temperature version	-20 °C to +250 °C (in Stainless Steel only)		
Ingress protection housing:	IP 65	**Cable entry:**	PG9-cable gland

DP-65 2 0001 08-04 E M

Materials, flow directions

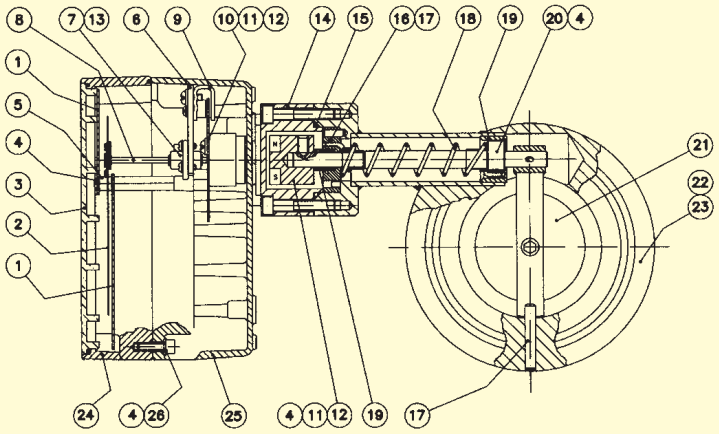

Materials

No.	Description	Steel	Stainless Steel	No.	Description	Steel	Stainless Steel
1	Scale	Aluminum	Aluminum	14	Cocking bolt	1.4404	1.4404
2	Pointer	Aluminum	Aluminum	15	Gasket	NBR	NBR
3	Show glass	Polycarbonate	Polycarbonate	16	Spring pad	1.4404	1.4404
4	Screw	1.4401	1.4401	17	Pin	1.4404	1.4404
5	Scale carrier (2-parts)	Brass chrome plated	Brass chrome plated	18	Spring	1.4310 NS	1.4310 NS
6	Linkage	Aluminum	Aluminum	19	Bushing	PTFE	PTFE
7	Bearing	Brass chrome plated	Brass chrome plated	20	Axle	1.4404	1.4404
8	Axle	1.4404	1.4404	21	Target disc	1.4404	1.4404
9	Magnet	Alnico	Alnico	22	Armature	Steel	1.4401
10	Brake disc	Aluminum	Aluminum	23	Lining	Polyamid 11	—
11	Magnet seat	Aluminum	Aluminum	24	Cover	Aluminum	Aluminum
12	Magnet	Alnico	Alnico	25	Housing	Aluminum	Aluminum
13	Bearing	1.4037	1.4037	26	Washer	Akulon	Akulon

wetted parts

Flow directions

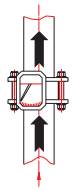	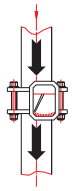	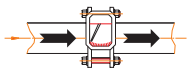	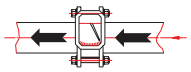
from bottom to top	from top to bottom	from left to right	from right to left

Please advise flow direction when ordering !

DP-65 3 0001 08-04 E M

Adjustable micro-limitswitch type DP-AMM

Bistable microswitch (change over) installed in the indicator housing of the flowmeter

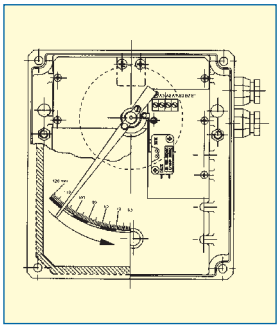

- DP-AMM1: 1 adjustable limitswitch
- DP-AMM2: 2 adjustable limitswitches
- Switch values: 3 (1) A / 250 V (VDE/CEE)
- Hysteresis: ±10% of endvalue
- Ambient temperature: -25 °C to +80 °C
- Mechanical lifetime: 10^7 switch operations
- Supply: 220 V AC, load: 6 A 24 V DC, load: 0,5 A

(gold plated on request)

Adjustable inductive limitswitch type DP-AMD

Inductive proximity switch, 3,5 mm, according to standard NAMUR DIN 19234, installed in the indicator housing of the flowmeter

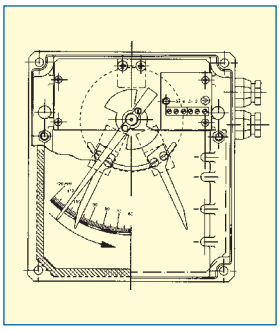

- DP-AMD1...2: 1...2 adjustable limitswitches
- Power supply: 8 V DC (via amplifier)
- Temperature: -25 °C to +70 °C

Amplifier (on request)

Model NAMUR (DIN 19234) for 1 or 2 adjustable inductive contacts

- Power supply: 24...230 V AC, 50 - 60 Hz 24...250 V DC
- Input: intrinsic safe circuit EEx ia IIC
- Output: 1 or 2 relays
- Load: 2...5 A / 40 V DC
- Temperature: -25 °C to +70 °C

Electronic measuring transducer HALLTEC IV

The HALLTEC IV is a transducer in 2 wire technique with a hall effect sensor. The hall sensor is based on the non contact sensing through the indicator mechanism.

Model:

TH4 transducer
TH4T transducer + totalizer

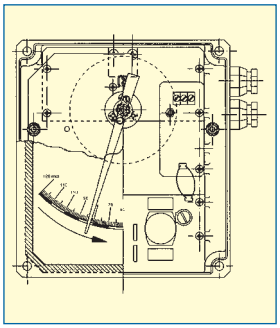

- Power supply: 12...36 V DC
- max. current / load consumption: max. 20 mA
- Analog output: 4 - 20 mA
- Accuracy: < 0,6 % referenced to the magnet position
- Load max.: 1,1 kΩ at 36 V DC
- Pulse output: MOSFET potentialfree N-channel
- I max.: 200 mA
- max. frequency: 2 Hz
- Pulse length: approx. 250 ms
- Totalizer: 9 digits (8 + 1 decimal), 4,5 mm peak with reset via potentialfree contact
- Ambient temperature: -5 °C to +70 °C

Electronic measuring transducer HALLTEC III (EEx ia IIC T4 ATEX)

The HALLTEC III is a transducer in 2 wire or 4 wire technique with a hall effect sensor. The hall sensor is based on the non contact sensing through the indicator mechanism.

Model:

2 wire:
TH32Ex transducer
TH32TEx transducer + totalizer

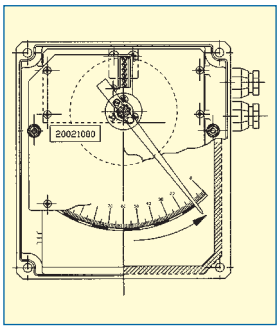

- max. current: 20 mA
- Analog output: 4 - 20 mA
- Accuracy: 0,6 % referenced to the magnet position
- Load max.: 700 Ω at 24 V DC power supply
- Totalizer: 9 digits, 4,5 mm peak with reset via potentialfree contact
- Ambient temperature: -5 °C to +40 °C

DP-65 4 0002 05-07 E M

meister strömungstechnik gmbh
Im Gewerbegebiet 2
63831 Wiesen
Germany
Tel.: +49 (0) 6096 / 97 20 - 0
Fax: +49 (0) 6096 / 97 20 - 30
E-Mail: Info@meister-flow.com
Internet: www.meister-flow.com

COVOL

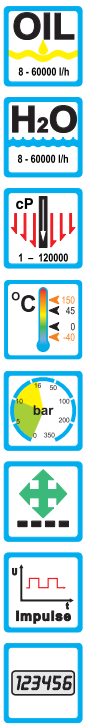

rotating piston
- high accuracy
- easy cleaning
- for high viscosities

07

OMG

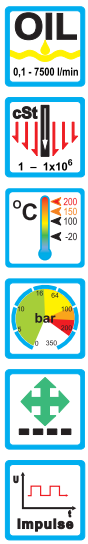

screw volumeter
- high accuracy
- wide measuring range
- wide viscosity range

07

Positive displacement meter

COVOL

Operation

The positive displacement meter COVOL works with an oscillating piston principle. During one rotation a defined volume will be transported and counted.

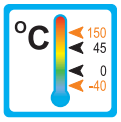

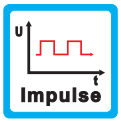

Application

The COVOL is used for volume counting and flow measurement of viscous liquids. The positive displacement meter is for example used in the following areas:

– Consumption measuring

– Dosing and mixing

– Batching

Features

The positive displacement meter proves itself through reliable function and easy handling. Further characteristics of this type are:

– High accuracy

– Good repeatability

– Easy cleaning

– Used for viscosity´s up to 120000 mPas (cP)

– Options:
Totalizer (CIP),
Digital indicator and measuring converter (MC-01, MT-02, CI-420, DFD-2)

Installation hints

The positive displacement meter can be mounted in any orientation in the system. The flow direction must be observed.

No flow straightening section necessary.

The unit must not be used as a supporting part in a pipe construction.

The liquids must not contain any particles!

The operating instruction for COVOL must be observed under any circumstances!

COVOL 1 0003 05-06 E M

Technical data

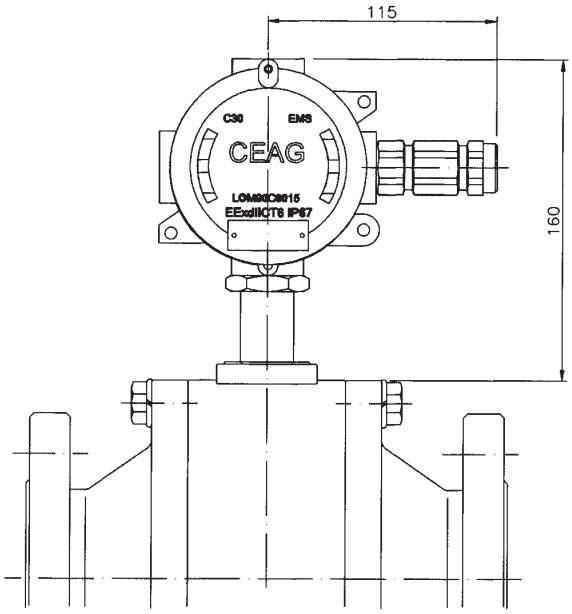

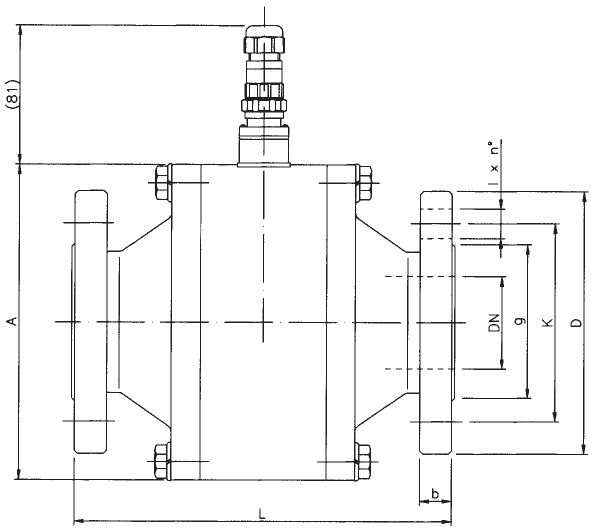

Connections, Dimensions and Weights

DN	D	k	g	l x n°	b	L		A		Weight [kg]	
						Stain-less steel	PVC PTFE	Stain-less steel	PVC PTFE	Stain-less steel	PVC PTFE
10	90	60	40	14 x 4	14	180	210	85	125	6	5
15	95	65	45	14 x 4	14	180	210	105	140	9	8
25	115	85	68	14 x 4	16	200	230	140	170	10	9
40	150	110	88	18 x 4	16	220	250	180	200	18	15
50	165	125	102	18 x 4	18	240	270	200	230	26	21
80	200	160	138	18 x 8	20	260	330	250	290	37	30
100	220	180	158	18 x 8	20	340	450	360	420	92	80

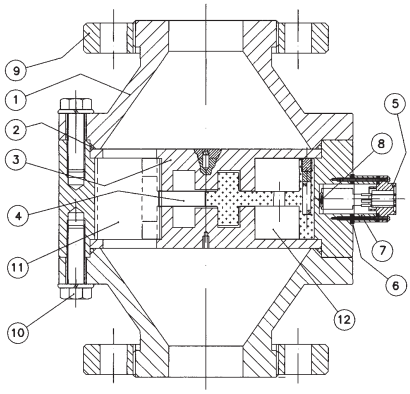

Materials

Nr.	Components	Stainless steel	PTFE	PVC / PP
1	Fittings	SS 1.4404	PTFE	PVC / PP
2	O-ring	NBR / Viton	Viton / PTFE	NBR / Viton
3	Disc	SS 1.4404	PTFE	PVC / PP
4	Piston	PTFE graphitized	PTFE graphitized	PTFE graphitized, PVC, PP
5	Connector	brass / plastic	brass / plastic	brass / plastic
6	Gaskets	NBR	NBR	NBR
7	Mounting	SS 1.4404	SS 1.4404 / PTFE	SS 1.4404 / PVC / PP
8	Reed-Contact	glass, 0,3 A / 220 V	glass, 0,3 A / 220 V	glass, 0,3 A / 220 V
9	Flanges	Steel / SS 1.4401	Steel / PTFE	Steel / PVC / PP
10	Screws	SS 1.4401	SS 1.4401	SS 1.4401
11	Seperator	SS 1.4404	PTFE	PVC / PP
12	Measuring chamber	SS 1.4404	PTFE	PVC / PP

COVOL 2 0003 05-06 E M

Technical data

Plastic-versions with ADF-housing

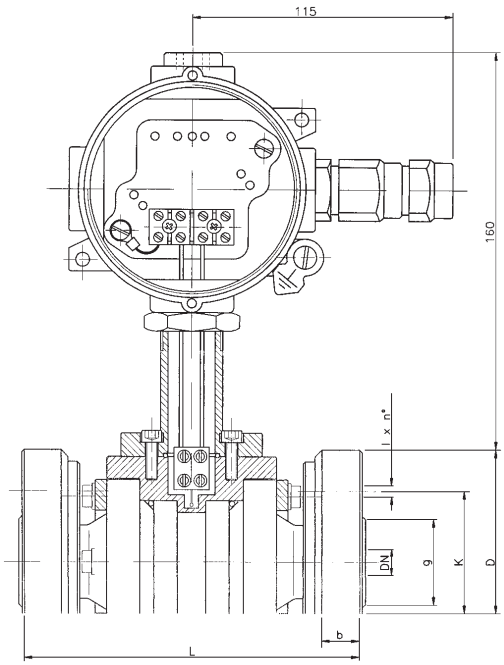

DN 10 HZ only for horizontal mounting

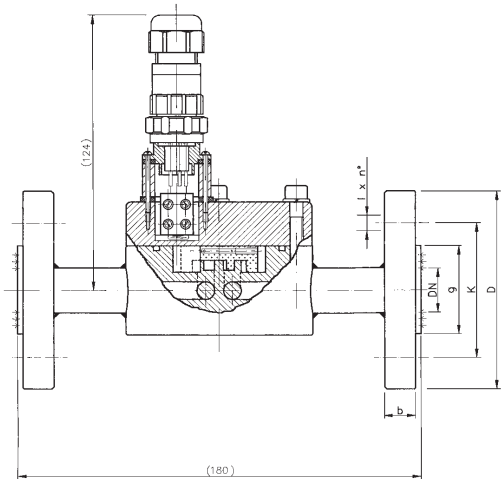

Dimensions DN 10 ... DN 100

DN	D	k	g	l x n°	b	L
10	95	60	40	10 x 4	25	210
15	100	65	44	12 x 4	45	210
25	120	85	64	12 x 4	45	230
40	150	110	84	16 x 4	45	250
50	175	125	98	16 x 4	45	270
80	230	160	138	16 x 4	55	330
100	250	180	158	18 x 8	65	450

Dimensions DN 10 HZ

DN	D	k	g	l x n°	b
10	90	60	40	14 x 4	14

Technical data	COVOL
Operating pressure stainless steel-version	PN 16
Operating pressure plastic-version	PN 10
Temperature range stainless steel-version	- 40 °C bis +150 °C
Temperature range PTFE-version	- 20 °C bis +130 °C
Temperature range PP-version	- 10 °C bis +80 °C
Temperature range PVC-version	0 °C bis +45 °C
Pressure drop	see diagram on page 4
Viscosity	120000 mPas (cP)
Accuracy	0,8 %
Repeatability	0,3 %
Connections	
Standard	EN 1092-1 flanges, PN 16
On request	Sanitary connections, NPT-thread
Options	Totalizer CIP (see page 5)
	MC-01, MT-02, CI-420, DFD-2 (see seperate data sheets)

COVOL 3 0003 05-06 E M

Measuring ranges and pressure drop

Measuring ranges

DN	range min. [l/h]	range max. [m³/h]	range intermittent [m³/h]	pulses per litre (± 12 %)
10 HZ	8	0,15	0,5	100
10	20	0,35	0,8	100
15	60	1,5	2,7	20
25	100	4,5	9,0	10
40	200	8,5	15,5	4
50	400	16,0	28,0	2
80	600	28,0	50,0	1
100	800	60,0	104,0	0,2

diagram 1: pressure drop versus flow rate

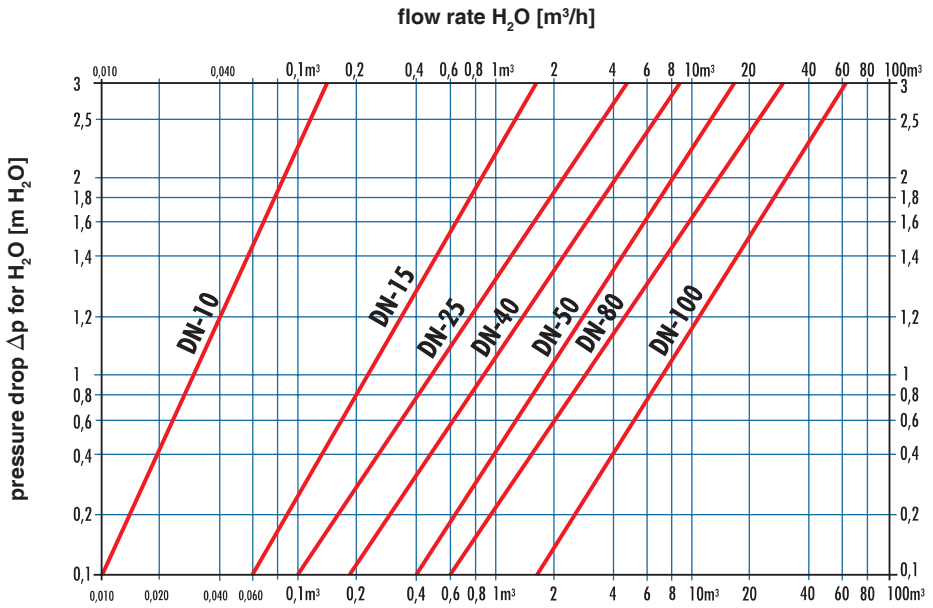

diagram 2: accuracy

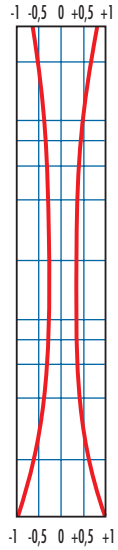

diagram 3: pressure drop versus viscosity of media

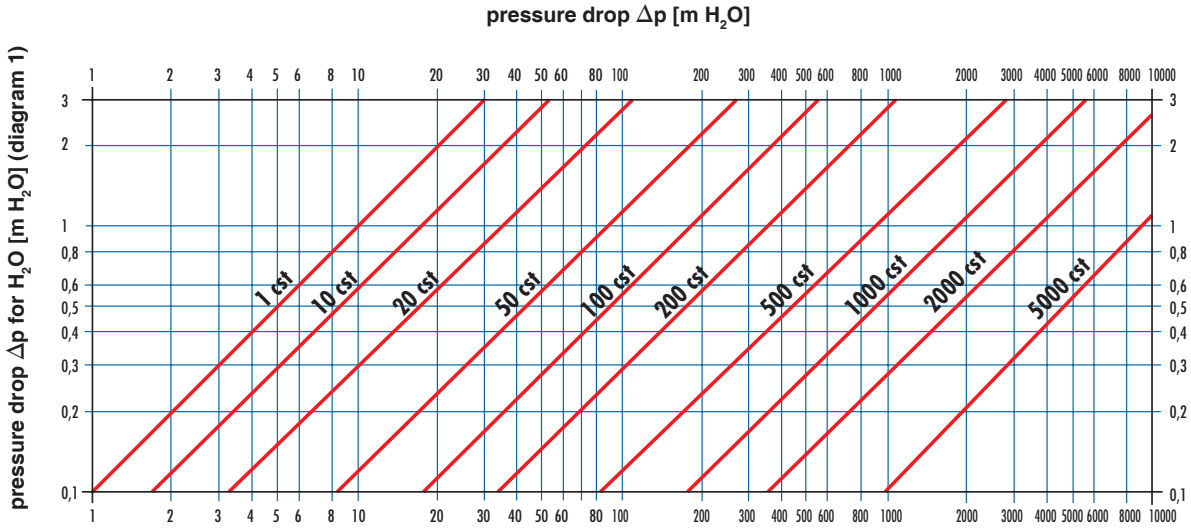

COVOL 4 0003 05-06 E M

Electronic counter CIP for Covol

The electronic totalizer CIP is specially disigned for the meter type COVOL. The totalizer is battery powered and directly mounted on the meter, so it is possible to show total quantities direct on site..

- Compact construction
- Battery-powered (3 - 4 years lifetime)
- 7-digits display, 9 mm high
- Resetting with a integrated push button or external with magnet
- PTFE coated aluminium housing (IP 65), cover in polycarbonat (UV-protected)

Dimensions DN 10...DN 100

DN	H
10	148
15	161
25	170
40	192
50	202
80	227
100	267

Dimensions DN 10 HZ

DN	H
10	142

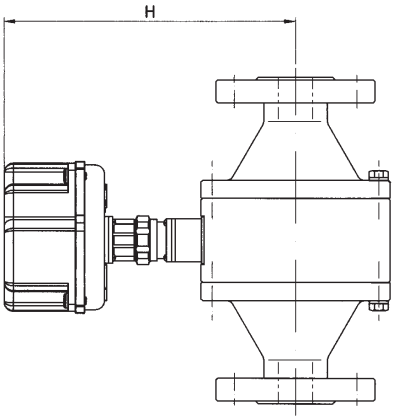

DN 10 ... DN 100

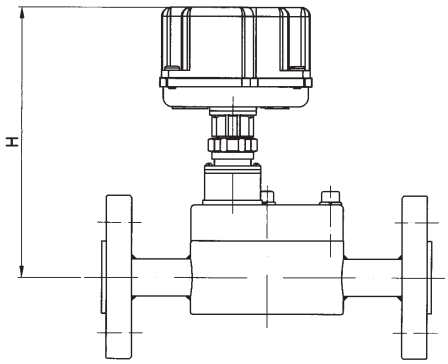

DN 10 HZ

COVOL 5 0003 05-06 E M

Function principle of the oscillating piston meter

position 1

The liquid flows into the inside of the ring piston and starts the rotation.

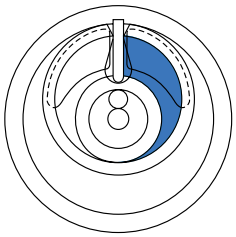

position 2

The liquid starts to fill the cavity between metering chamber and the outside of the piston and continues to fill the inside of the piston.

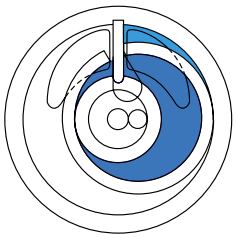

position 3

The pistons inside is completely filled. The liquid continues to fill the outside cavity and keep the piston in motion.

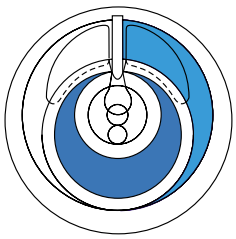

position 4

During further filling of the cavity, the inside of the piston will be discharged through the outlet. Then begins a new cycle by filling the pistons inside again.

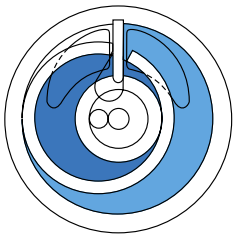

COVOL 6 0003 05-06 E M

meister strömungstechnik gmbh
Im Gewerbegebiet 2
63831 Wiesen
Germany
Tel.: +49 (0) 6096 / 97 20 - 0
Fax: +49 (0) 6096 / 97 20 - 30
E-Mail: Info@meister-flow.com
Internet: www.meister-flow.com

Screw Volumeter

OMG

Function

The fluid flow drives a pair of measuring spindles. An exactly defined volume is filled and evacuated with each rotation of the main spindle.
By counting the revolutions within a period, the volume flow can be calculated.

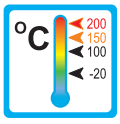

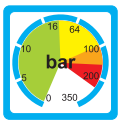

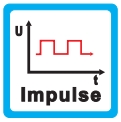

Application

The screw volumeters type OMG are employed to count volume and to measure volume flow of viscous liquids.
Areas of application:

– Fuel consumption measurement

– Test stands

– Hydraulics

– Blending and batching technology

Features

The instruments prove themselves through reliable function and easy handling.
Further characteristics of this sturdy type are:

– High reliability

– Self-cleaning metering boxes

– Long working life

– Wide measuring range

– Pulsation-free measuring principle

– High accuracy

– Wide viscosity range

– Bi-directional measurement possible

– Accessories:
Digital displays, Measuring transducers, Temperature sensors (see page 10)

Installation hints

The installation of the screw volumeter can be done in any way in the system. The flow direction must be observed.

No flow straightening section necessary.

The instrument must not be used as a supporting part in a pipe construction.

The liquid must not contain any solids.

The operating instructions for OMG must be observed under any circumstances.

OMG 1 0003 04-07 E M

Dimensions and connections

Pipe thread

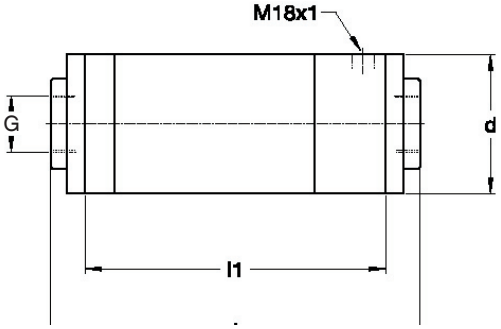

Dimensions Thread connection				
Pipe thread	OMG-13	OMG-20	OMG-32	OMG-52
G	1/2"	3/4"	1"	1 1/2"
p_{max} [bar]	250	250	250	160
l [mm]	145	145	215	295
d [mm]	90	74	104	118
l1 [mm]	94	145	215	240
m [kg]	4,6	4,1	11	18

DIN Flanges

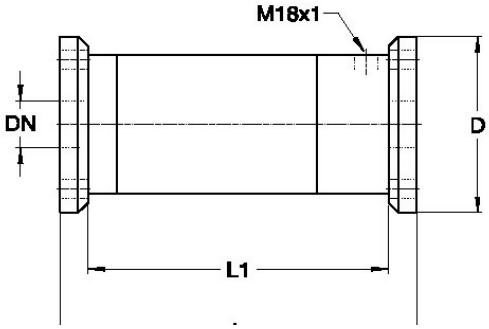

Dimensions Flange connection											
DIN Flanges	OMG-13			OMG-20			OMG-32			OMG-52	
DN	15	15	15	20	15	15	32	25	25	40	40
PN [bar]	40	160	250	40	160	250	40	160	250	40	160
L [mm]	145	145	145	185	185	195	265	265	275	285	295
D [mm]	95	105	130	105	105	130	140	140	150	150	170
L1 [mm]	94	94	94	145	145	145	215	215	215	240	240
m [kg]	4,7	4,8	6,0	6,0	6,0	8,1	16	16	19	21	23

OMG 2 0003 04-07 E M

Special connections

NPT-threads, ANSI-flanges or customer-specific special connections on request!

Dimensions and connections

Pipe thread

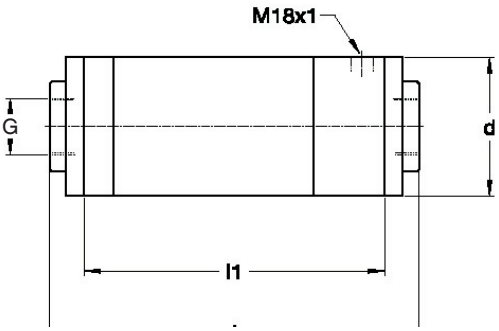

Dimensions Thread connection				
Pipe thread	OMG-68	OMG-100	OMG-140	
G	2"	4"	6"	
p_{max} [bar]	100	40	40	
l [mm]	355	480	645	
d [mm]	138	188	267	
l1 [mm]	295	400	537	
m [kg]	29	70	180	

DIN Flanges

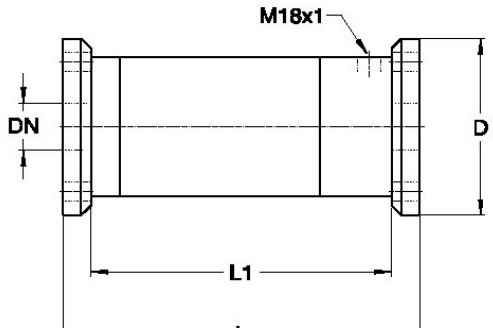

Dimensions Flange connection							
DIN Flanges	OMG-68		OMG-100		OMG-140		
DN	50	50	100	100	150	150	
PN [bar]	40	100	16	40	16	40	
L [mm]	340	355	450	460	600	610	
D [mm]	165	195	220	235	285	300	
L1 [mm]	295	295	400	400	537	537	
m [kg]	31	37	65	70	170	180	

Special connections

NPT-threads, ANSI-flanges or customer-specific special connections on request!

OMG 3 0003 04-07 E M

Technical data

Technical data

Type			OMG-13	OMG-20	OMG-32	OMG-52
Connections			see page 2			
Materials			see page 6			
Orientation			any orientation, no straightening section required			
Flow direction			both directions possible			
Liquids			chemically neutral liquids, lubricating properties, non abrasive			
Filtration			max. 0,1 mm mesh size		max. 0,3 mm mesh size	
Viscosity	[mm²/s]		1 to 1x10⁶			
Minimum flow:	Q_{min}	[l/min]	0,1	0,3	1	3,5
Nominal flow:	Q_{nom}	[l/min]	**10**	**30**	**100**	**350**
Maximum flow:	Q_{max}	[l/min]	15	45	150	525
Pressure (max.)		[bar]	250	250	250	160
Temperature		[°C]	-20 ... +200	-20 ... +200	-20 ... +200	-20 ... +200
Pressure drop			see diagram on page 7			
Accuracy			see diagram on page 6			
Metering box volume		[ml/U]	1,64	6,25	25,6	112,7
Revolution n at Q_{min}		[1/min]	61	48	39	31
Revolution n at Q_{nom}		[1/min]	6090	4800	3900	3105
Revolution n at Q_{max}		[1/min]	9120	7200	5850	4658
Number of poles (K1)			2	4	6	8
Number of poles (K2)			4	8	12	16
Number of poles (K3)*			12	16	26	34
K-factor (K1)		[Imp/l]	1216	640	234	71,0
K-factor (K2)		[Imp/l]	2432	1280	468	142
K-factor (K3)*		[Imp/l]	7296	2560	1014	302
Volume per pulse (K1)		[ml/Imp]	0,822	1,56	4,27	14,08
Volume per pulse (K2)		[ml/Imp]	0,411	0,782	2,14	7,04
Volume per pulse (K3)*		[ml/Imp]	0,137	0,391	0,99	3,31
Pulse frequency f1 at Q_{min}		[Hz]	2,0	3,2	3,9	4,1
Pulse frequency f1 at Q_{nom}		[Hz]	203	320	390	414
Pulse frequency f1 at Q_{max}		[Hz]	304	480	585	621
Pulse frequency f2 at Q_{min}		[Hz]	4,1	6,4	7,8	8,3
Pulse frequency f2 at Q_{nom}		[Hz]	405	640	780	828
Pulse frequency f2 at Q_{max}		[Hz]	608	960	1170	1243
Pulse frequency f3 at Q_{min}		[Hz]	12,2	12,8	16,9	17,6
Pulse frequency f3 at Q_{nom}		[Hz]	1216	1280	1690	1760
Pulse frequency f3 at Q_{max}		[Hz]	1824	1920	2535	2640

*Observe flow range! Minimum flow, when flow falls below Q_{min}: see page 9

Measuring sensor

Type	OMG-13	OMG-20	OMG-32	OMG-52
Sensor thread 1 (standard)	M 18 x 1			
Sensor thread 2 (optional)	M 18 x 1			
Sensor 1 (standard)	Sensor and Impulse transmitter for flow measurement, see page 8 and 9			
Sensor 2 (optional)	Sensor and Impulse transmitter for rotation identification, see page 8 and 9			
Accessories				
Electronics	see table on page 10			
Temperature sensor	see table on page 10			

OMG 4 0003 04-07 E M

Technical data

Technical data

Type			OMG-68	OMG-100	OMG-140
Connections			see page 3		
Materials			see page 6		
Orientation			any orientation, no straightening section required		
Flow direction			both directions possible		
Liquids			chemically neutral liquids, lubricating properties, non abrasive		
Filtration			max. 0,3 mm mesh size		
Viscosity [mm²/s]			1 to 1x10⁶		
Minimum flow:	Q_{min}	[l/min]	7	20	50
Nominal flow:	Q_{nom}	[l/min]	**700**	**2000**	**5000**
Maximum flow:	Q_{max}	[l/min]	1050	3000	7500
Pressure (max.)		[bar]	100	40	40
Temperature		[°C]	-20 ... +200	-20 ... +200	-20 ... +200
Pressure drop			see diagram on page 7		
Accuracy			see diagram on page 6		
Metering box volume		[ml/U]	251,3	833,3	2259,9
Revolution n at Q_{min}		[1/min]	28	24	22
Revolution n at Q_{nom}		[1/min]	2784	2400	2214
Revolution n at Q_{max}		[1/min]	4182	3600	3318
Number of poles (K1)			10	14	20
Number of poles (K2)			20	28	40
Number of poles (K3)*			42	48	50
K-factor (K1)		[Imp/l]	39,8	16,8	8,85
K-factor (K2)		[Imp/l]	79,6	33,6	17,7
K-factor (K3)*		[Imp/l]	167	57,6	22,1
Volume per pulse (K1)		[ml/Imp]	25,13	59,52	112,99
Volume per pulse (K2)		[ml/Imp]	12,56	29,76	56,50
Volume per pulse (K3)*		[ml/Imp]	5,98	17,36	45,20
Pulse frequency f1 at Q_{min}		[Hz]	4,6	5,6	7,4
Pulse frequency f1 at Q_{nom}		[Hz]	464	560	738
Pulse frequency f1 at Q_{max}		[Hz]	697	840	1106
Pulse frequency f2 at Q_{min}		[Hz]	9,3	11,2	14,8
Pulse frequency f2 at Q_{nom}		[Hz]	929	1120	1475
Pulse frequency f2 at Q_{max}		[Hz]	1393	1680	2213
Pulse frequency f3 at Q_{min}		[Hz]	19,5	19,2	18,4
Pulse frequency f3 at Q_{nom}		[Hz]	1949	1920	1842
Pulse frequency f3 at Q_{max}		[Hz]	2927	2880	2763

*Observe flow range! Minimum flow, when flow falls below Q_{min}: see page 9

Measuring sensor

Type	OMG-68	OMG-100	OMG-140
Sensor thread 1 (standard)	M 18 x 1		
Sensor thread 2 (optional)	M 18 x 1		
Sensor 1 (standard)	Sensor and Impulse transmitter for flow measurement, see page 8 and 9		
Sensor 2 (optional)	Sensor and Impulse transmitter for rotation identification, see page 8 and 9		
Accessories			
Electronics	see table on page 10		
Temperature sensors	see page 10		

Materials and Measuring accuracy

Materials

Materials	
Description	Materials
Casing	Spheroidal graphite cast iron (0.7040)
Spindles	Nitrated steel (1.0737)
Bearings	Roller bearings with metal cage
	or PEEK-cage
Screws	8.8
Seals	Viton® 80 Shore

Measuring accuracy

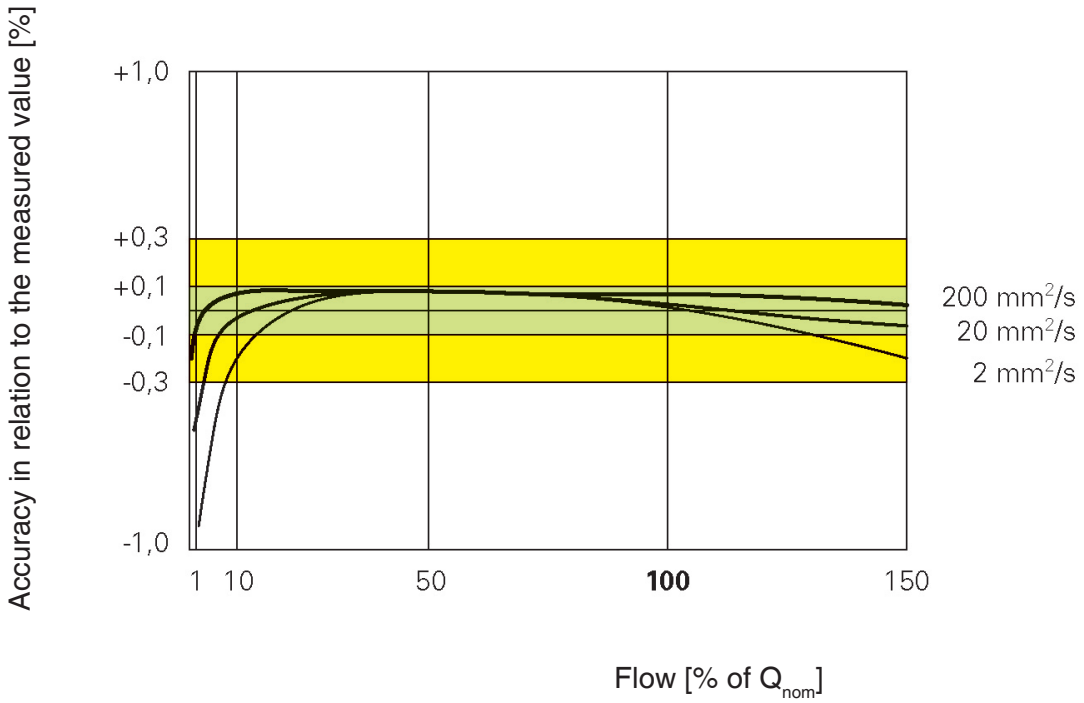

OMG 6 0003 04-07 E M

The diagram shows the characteristic of the volumeters OMG.

Each volumeter is being calibrated to document the device-specific values!

Pressure drop and Measuring ranges

Pressure drop

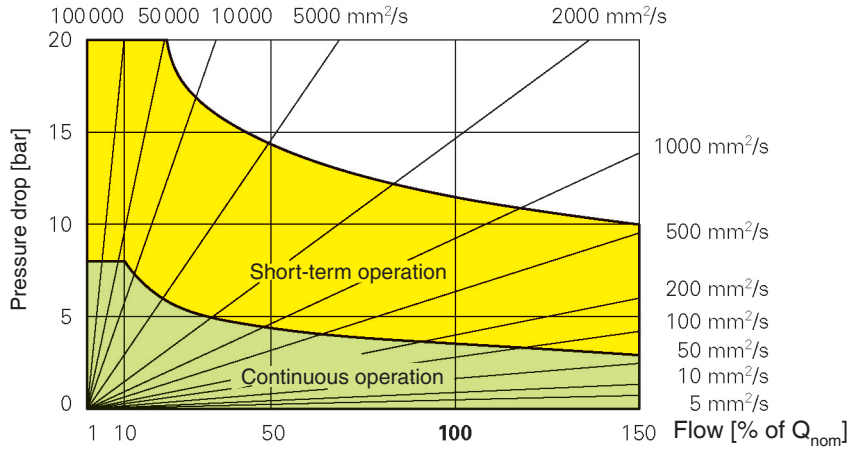

Measuring range diagram

(1) The smooth-running measuring device effects a reliable function, even at very low drive caused by the liquid.

(2) Through the stable mechanics of the volumeters, high flows can be realized even with high-viscous liquids.

Green area: Precision and operation time are optimally combined.

Yellow area: Instrument can operate continuous and works within the limits of weights and measures (± 0,3 %)

Orange area: Short-term operation, accuracy within ± 0,1 %

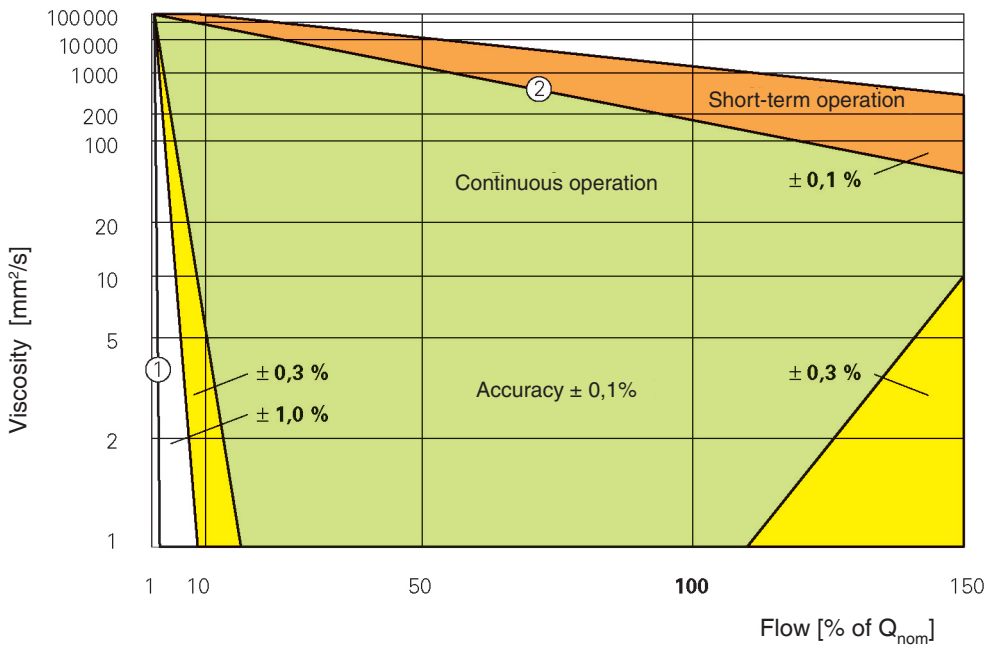

OMG 7 0003 04-07 E M

Sensors

BEG 43D		BEG 44	
Application	Standard	**Application**	High temperature
K-factor	K1	**K-factor**	K2

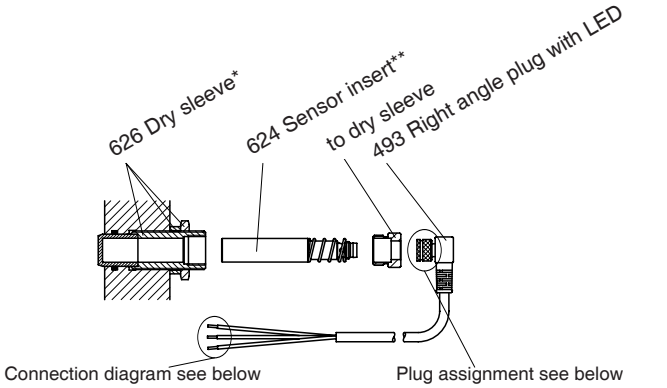

*SW 24, Tightening torque: 50 Nm **Measuring transducer integrated

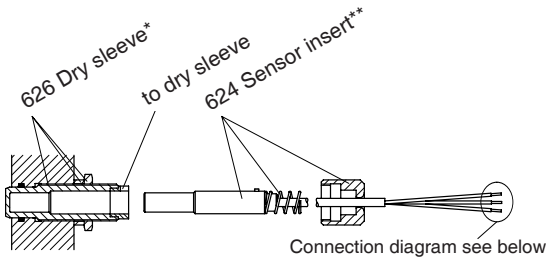

*SW 24, Tightening torque: 50 Nm **Measuring transducer integrated

Electrical specification		Electrical specification	
Operating principle	inductive	**Operating principle**	Hallsensor
Operating switch distance	0,5 mm	**Operating switch distance**	0,25 mm
Output		**Output**	
Circuitry	PNP square wave	Circuitry	PNP square wave
Maximum load current	200 mA	Maximum load current	10 mA
Frequency range	0...1000 Hz	**Frequency range**	0...5000 Hz
Voltage range	10...30 V DC	**Voltage range**	10...30 V DC
Current consumption without load	≤ 10 mA	**Current consumption without load**	< 18 mA
Voltage drop	≤ 3 V	**Voltage drop**	< 4,5 V
Differential protection	yes	**Differential protection**	up to 50 °C
Reverse voltage protection	yes	**Reverse voltage protection**	yes
Connection diagram	see below	**Connection diagram**	see below

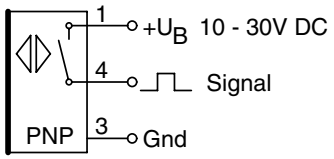

1 ... brown
4 ... black
3 ... blue

Plug assignment

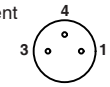

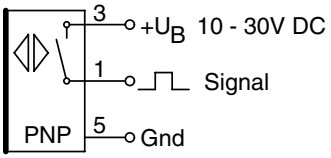

3 ... red
1 ... yellow
5 ... black

Mechanical specification		Mechanical specification	
Max. Pressure (on sensor face)	250 bar	**Max. Pressure (on sensor face)**	420 bar
Operating temperature		**Operating temperature**	
Sensor face	-20 ... +100 °C	Sensor face	-40 ... +150 °C
Plug	-25 ... +90 °C		
Connection thread	M 18 x 1	**Connection thread**	M 18 x 1
Casing material (dry sleeve)	Arcap / Ceramic	**Casing material (dry sleeve)**	Arcap
Connection type	Right angle plug with LED (3-pin)	**Connection type**	Cable
Cable sheath	PUR (3x0,25 mm²)	**Cable sheath**	PTFE (4x0,24 mm²)
Cable length	3 m	**Cable length**	3 m
Ingress protection	IP 65	**Ingress protection**	IP 67

OMG 8 0003 04-07 E M

Sensors

BEG 45 + BEV 13		BEG 47D	
Application	High temperature	**Application**	Ex-protection
K-factor	K3 (1)	**K-factor**	K1

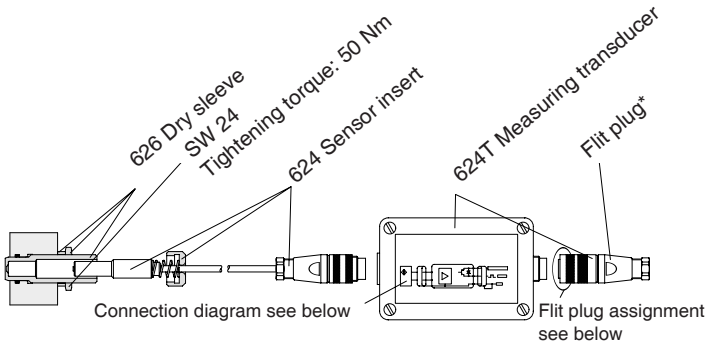

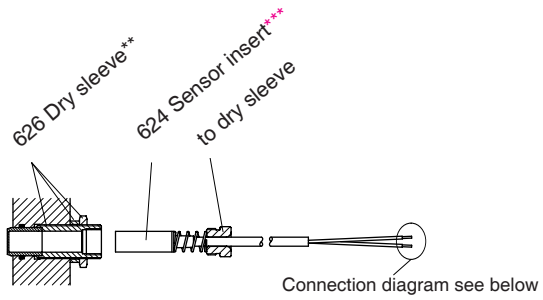

* optional with 5 m, 10 m or 20 m cable

**SW 24, Tightening torque: 50 Nm

***without measuring transducer

Electrical specification		Electrical specification	
Operating principle	magnetical	**Operating principle**	inductive
Operating switch distance	< 0,25 mm	**Operating switch distance**	
Output		Pole wheel 2.4068	0,5 mm
Circuitry	PNP square wave	Pole wheel 1.4401	0,15 mm
Maximum load current	50 mA	**Output**	
Frequency range	10...2000 Hz (1)	Circuitry	Namur DIN 19234, sine wave
(1) If Q_{min} falls short, there will be the smallest possible flow Q_{lim},		**Internal resistance**	Ri ≈ 1 kΩ (8 V DC)
due to the smallest possible frequency f_{lim}:		**Frequency range**	0...2000 Hz

	OMG 13	OMG 20	OMG 32	OMG 52	OMG 68	OMG 100	OMG 140
Q_{lim}	0,05 l/min	0,2 l/min	0,53 l/min	2,0 l/min	5,4 l/min	2,1 l/min	5,5 l/min
f_{lim}	6 Hz	8 Hz	9 Hz	10 Hz	15 Hz	2 Hz	2 Hz

Voltage range	10...30 V DC	**Voltage range**	5...25 V DC
Current consumption without load	≤ 40 mA	**Protection class**	EEx ia IIC T6
Voltage drop	≤ 3 V		EEx ib IIC T6
Differential and Reverse voltage protection	yes		

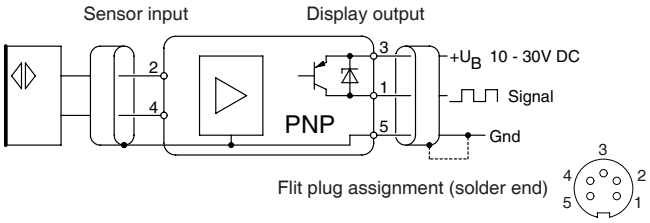

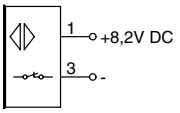

1 ... brown
3 ... blue

Mechanical specification		Mechanical specification	
Max. Pressure (on sensor face)	420 bar	**Max. Pressure (on sensor face)**	40 bar
Operating temperature		**Operating temperature**	
Sensor face	-40 ... +250 °C	Sensor face	-25 ... +100 °C
Measuring transducer	0 ... +50 °C		
Connection thread	M 18 x 1	**Connection thread**	M 18 x 1
Casing material (Dry sleeve)	Arcap	**Casing material (Dry sleeve)**	1.4401 / Ceramic
Connection type	Plug coupling (5-pin)	**Connection type**	Cable
Cable sheath	PTFE (3x0,24 mm²)	**Cable sheath**	PVC (2x0,34 mm²)
Cable length (Sensor insert)	1 m	**Cable length**	2 m
Ingress protection	IP 65	**Ingress protection**	IP 68
The sensor is sensitive to vibrations!			
Do not use in systems with pulsations, piston pumps, etc.!			

OMG 9 0003 04-07 E M

Electronics

Selection table Electronics for OMG				
	BEM 300	BEM 500	CUB 5	PAX I
Application	Local indication	Management system	Counter Tachometer	Counter, Tachometer Remote indication
Suitable sensors	BEG 43D	BEG 43D	BEG 43D	BEG 43D
	BEG 44	BEG 44	BEG 44	BEG 44
	BEG 45 + BEV 13	BEG 45 + BEV 13	BEG 45 + BEV 13	BEG 45 + BEV 13
	BEG 47D	BEG 47D		
Inputs				
Sensor input	single channel	double channel	double channel	double channel
PT100	—	yes	—	—
Display	4 lines	4 lines	1 line	1 line
Outputs				
Analog output	1	2	—	optional
Pulse output	1	2	—	1
Supply	24 V DC ± 20 %	24 V DC ± 20 %	9 - 28 V DC	12 V DC ± 10 %
Pulsation compensation	—	yes	—	—
Temperature compensation	—	yes	—	—
Linearisation	—	7 points	—	—
Housing				
Installation	Wall mounting, External mounting, Control cabinet		Control panel	Control panel
Material	Plastic	Plastic	Plastic	Plastic
Interface	Modbus RTU by RS 232 or RS 485		—	various (optional)
Relay	—	2	—	optional

Temperature sensors

Temperature sensors for OMG					
	EET 06	EET 13			
Suitable for					
	OMG-13	OMG-13			
	OMG-20	OMG-20			
	OMG-32	OMG-32			
	OMG-52	OMG-52			
	OMG-68	OMG-68			
	OMG-100	OMG-100			
	OMG-140	OMG-140			
Connection thread	G 1/4"	G 1/4"			
System	PT 100, DIN 43760	PT 100, DIN 43760			
Max. Pressure [bar]	400	40			
Temperature range [°C]	-20 ... +200	-20 ... +200			
Materials	1.4571 / Viton	1.4571 / Viton			

OMG 10 0003 04-07 E M

meister strömungstechnik gmbh
Im Gewerbegebiet 2
DE - 63831 Wiesen
Tel.: +49 (0) 6096 / 97 20 - 0
Fax: +49 (0) 6096 / 97 20 - 30
E-Mail: Info@meister-flow.com
Internet: www.meister-flow.com

DMIK

magnetic-inductive flowmeter
- compact design
- no moving parts
- low pressure drop

Overview

Flow sensor

DMIK

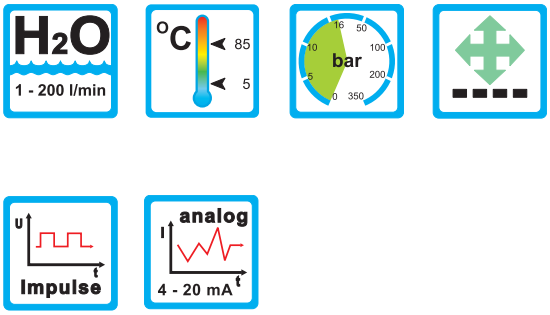

Range of Application

Measuring principle

- magnetic-inductive

Application

- Cooling systems and cooling circuits
- Mechanical engineering
- Chemical industry
- Research and Development

Features

- No moving parts
- No mechanical wear
- No additional pressure loss
- Fast response (< 500 ms)
- Maintenance free

Mounting instructions

- The operating instructions for DMIK must be observed!
- Download: www.meister-flow.com

Operating Data

Type	DMIK-7	DMIK-10	DMIK-20
Nominal pressure		PN 16	
Media temperature		5...85 °C	
Ambient temperature		5...70 °C	
Accuracy	±2 %	±1 %	±2 %

Measuring ranges

Type	
DMIK-7	1...20 l/min
DMIK-10	2...40 l/min
DMIK-20	10...200 l/min

DMIK 1 0001 04-10 E M

Technical drawings, electrical connection and pressure loss

Technical drawing DMIK-7 and DMIK-10

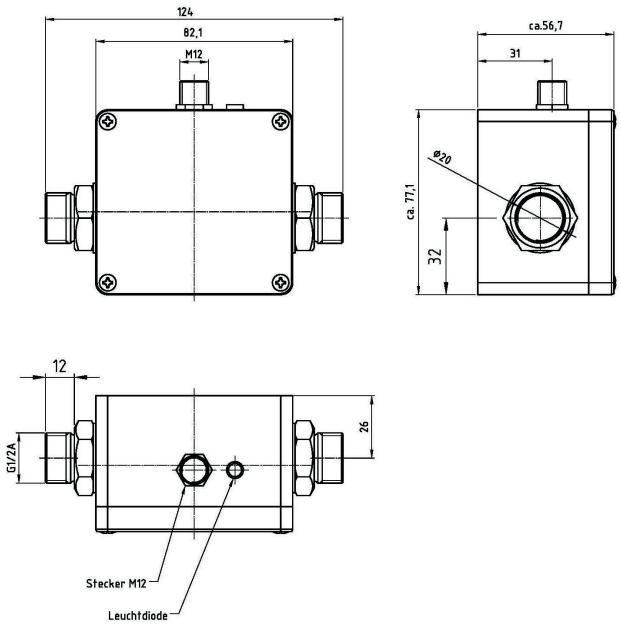

Technical drawing DMIK-20

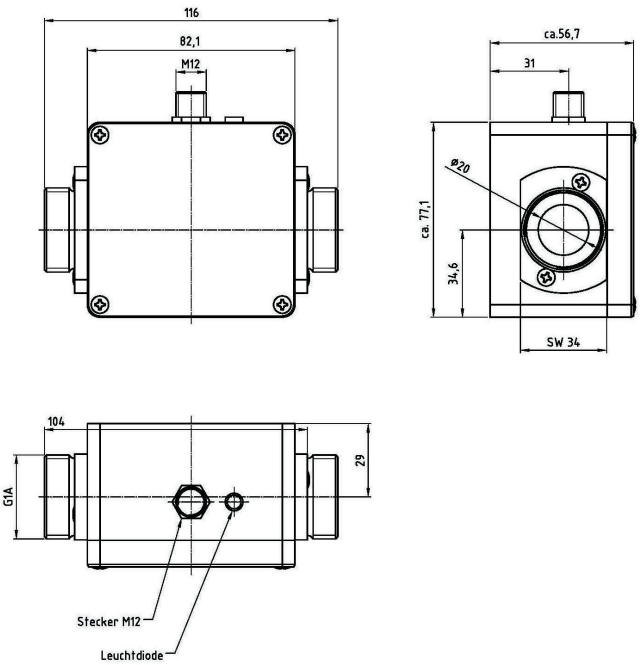

Electrical connection

Electrical connection

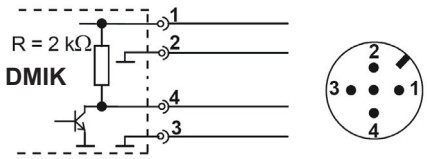

Pin 1: 24V DC **Pin 4: NPN**
Pin 2: 4...20 mA (optional) **Pin 3: GND**

Electrical connection to a PLC

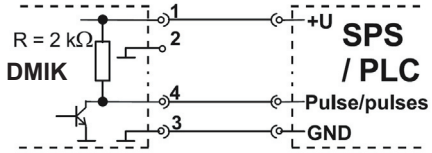

Pin 1: 24V DC **Pin 4: NPN**
Pin 2: frei / idle **Pin 3: GND**

Pressure loss

DMIK-7 und DMIK-10

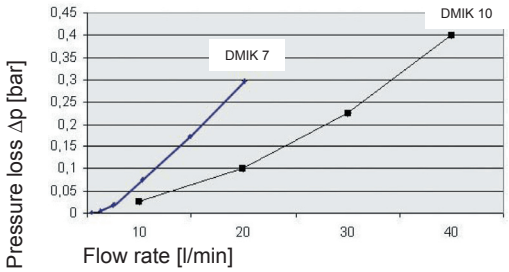

DMIK-20

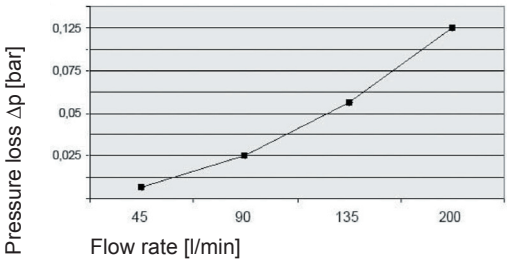

DMIK 2 0001 04-10 E M

Technical data, electrical data and materials

Technical Data

Type	DMIK-7	DMIK-10	DMIK-20
Measuring range:	1...20 l/min	2...40 l/min	10...200 l/min
Measuring accuracy:	±2 % of the measured value	±1 % of the measured value	±2 % of the measured value
Repeatability:	2 %	1 %	2 %
Signal activation start:	ca. 0,5 l/min	ca. 1 l/min	ca. 5 l/min
Medium	Water and other conductive fluids		
Minimum conductivity	50 µS / cm (lower conductivity influences measuring accuracy)		
Max. temperature:	5...85 °C		
Ambient temperature:	5...70 °C		
Nominal pressure:	PN 16		
Nominal width:	DN 7	DN 10	DN 20
Process connection:	G½-ISO 228 male thread	G½-ISO 228 male thread	G1-ISO 228 male thread
Flow indicator:	green LED, blinking proportional to flow through		

Electrical Data

Response time:	< 500 ms
Electrical connection:	Plug connector M 12x1
Supply voltage:	24 VDC ± 10 %
Current consumption:	max. 80 mA
Protective measures:	short-circuit proof (up to 30 V) polarity protected (up to -30 V)
Protection class:	IP 65

Materials

Electrodes:	1.4571
Procoess connctions:	1.4571
Measuring tube:	PEEK-GF30
Gaskets:	EPDM
Housing:	Cast aluminium

DMIK 3 0001 04-10 E M

Output signals

Type	DMIK-7	DMIK-10	DMIK-20
Frequency output (standard)			
Puls rate[1]:			
Standard	855 pulses/l	855 pulses/l	200 pulses/l
Optional	1...2000 pulses/l Factory configurable	1...1000 pulses/l Factory configurable	1...200 pulses/l Factory configurable
Resolution:			
Standard	1,2 ml/pulse	1,2 ml/pulse	5 ml/pulse
Optional	1000...0,5 ml/pulse Factory configurable	Option: 1000...1 ml/pulse Factory configurable	Option: 1000...5 ml/pulse Factory configurable
Signal form:	Square wave signal NPN Internal pull-up resistor 2 kΩ Pulse-Duty ratio 50 : 50		
Signal current:	max. 20 mA current limited		
Analog output (optional)			
Signal:	4...20 mA corresponds 0...20 l/min[2]	4...20 mA corresponds 0...40 l/min[2]	4...20 mA corresponds 0...200 l/min[2]
Current limiting:	ca. 26 mA		
Max. load:	250 Ω to GND		

[1] Optional output signal of lower frequency, specifically for connection to digital PLC-ports.
[2] Others on request

Accessories

Power supply cord with injection molded coupling socket

M12x1, 4-pin version, shielded
Jacket material PUR (T_{max} = 80 °C),
UL approval

Length:

3 m
5 m
10 m

DMIK 4 0001 04-10 E M

meister strömungstechnik gmbh
Im Gewerbegebiet 2
63831 Wiesen
Germany
Tel.: +49 (0) 6096 / 97 20 - 0
Fax: +49 (0) 6096 / 97 20 - 30
E-Mail: Info@meister-flow.com
Internet: www.meister-flow.com

UDMS

ultrasonic flowmeter
- wide measuring range
- integrated up-/down-stream section
- display

Overview

Flowmeter

UDMS

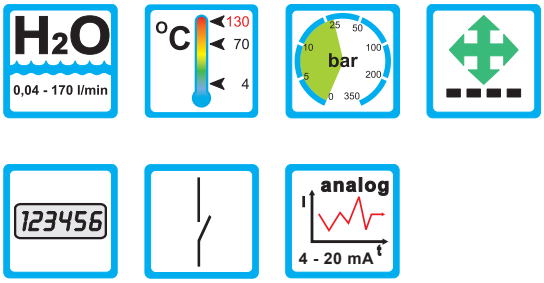

Range of Application

Measuring principle

- Ultra-sonic

Application

- Cooling systems and circuits
- Mechanical engineering e.g. welding machines and laser plants
- Automotive industry

Features

- Wide measuring range
- High accuracy
- Outputs (optional)
  2 switching outputs
  2 switching outputs and 1 analog output
- Parameter programmable by keypad
- Display unit rotable
- Integrated up- and downstream section
- Threaded connection

Mounting instructions

- Die operating instructions for UDMS must be observed!
- Download: www.meister-flow.com

Operating Data

Type	UDMS
Nominal pressure	PN 25
Media temperature	4...70 °C
Enclosure separate from sensor	4...130 °C
Pressure loss	see diagram on page 3
Linearity error	± 2,5 % m.v. at 25 °C

Measuring ranges

Type	Measuring ranges
UDMS-10	0,04 ... 10 l/min
UDMS-25	0,1 ... 25 l/min
UDMS-40	0,16 ... 40 l/min
UDMS-100	0,4 ... 100 l/min
UDMS-170	0,68 ... 170 l/min

UDMS 1 0005 04-10 E M

Dimensions and versions

Dimensions

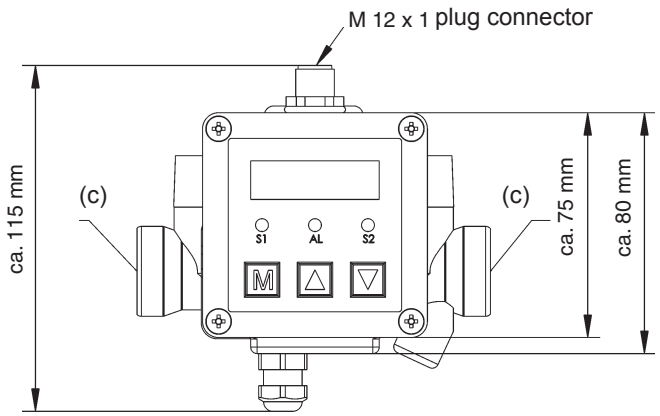

Dimensions

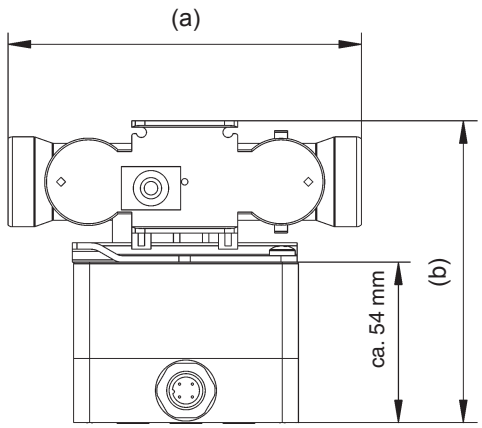

Type	a [mm]	b [mm]	c	Weight [kg]
UDMS-10	110	100	G 3/4"	850
UDMS-25	110	100	G 3/4"	850
UDMS-40	190	100	G 1"	1200

Type	a [mm]	b [mm]	c	Weight [kg]
UDMS-100	260	130	G 1 1/4"	3000
UDMS-170	300	135	G 2"	4000

Versions

Type	Nominal size DN	Process connection Thread, male	Measuring range [l/min]	2 switching outputs Connection diagram A (see page 3)	2 switching outputs + 1 analog output Connection diagram B (see page 3)
UDMS-10SD	20	G 3/4"	0,04 - 10	▲	
UDMS-10SA	20	G 3/4"	0,04 - 10		▲
UDMS-25SD	20	G 3/4"	0,1 - 25	▲	
UDMS-25SA	20	G 3/4"	0,1 - 25		▲
UDMS-40SD	25	G 1"	0,16 - 40	▲	
UDMS-40SA	25	G 1"	0,16 - 40		▲
UDMS-100SD	32	G 1 1/4"	0,4 - 100	▲	
UDMS-100SA	32	G 1 1/4"	0,4 - 100		▲
UDMS-170SD	50	G 2"	0,68 - 170	▲	
UDMS-170SA	50	G 2"	0,68 - 170		▲

UDMS 2 0005 04-10 E M

Pressure drop and electrical connection

Pressure drop

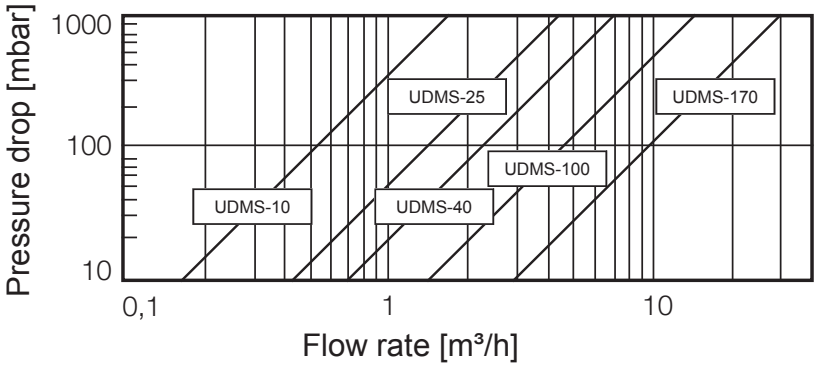

Electrical connection

Connection diagram A
(2 switching outputs)

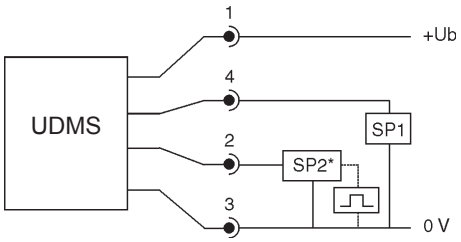

* SP2 = Pulse output

Pulse output on request

Connection diagram B
(2 switching outputs, 1 analog output)

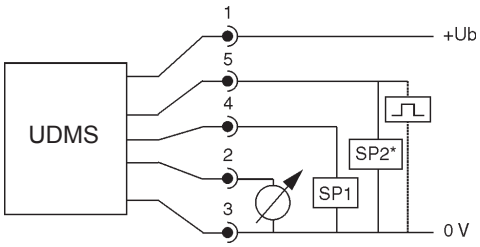

* SP2 = Pulse output

Pulse output on request

Plug M 12x1 4-pin	Version with 2 switching outputs
PIN 1	+Ub (15...32 V DC)
PIN 2	SP2 (0,5 A max.)
PIN 3	0 V
PIN 4	SP1 (0,5 A max.)

Plug M 12x1 5-pin	Version with 2 switching outputs and 1 analog output
PIN 1	+Ub (15...32 V DC)
PIN 2	analog
PIN 3	0 V
PIN 4	SP1 (0,5 A max.)
PIN 5	SP2 (0,5 A max.)

UDMS 3 0005 04-10 E M

Technical data

Sensor element:	Ultrasonic sensor
Media:	Water similar media
Inlet - outlet zone:	integrated in the measuring device
Max. pressure:	25 bar higher pressures on request
Operating temperature:	
Medium (enclosure separate from sensor)	+4 °C... +130 °C
Electronics	-10 °C... +70 °C
Storage temperature:	-30 °C... +80 °C
Materials:	
Wetted parts	Brass pressed
Seals (media)	KLINGERSIL®
Electronics housing	Aluminum die-cast
Key-pad	Polyester
Display:	4-digit 7-segment LED-display digit height 12 mm, red
Display rate	500 ms
Error display	LED yellow and alphanumeric display
Operating elements:	3 easy-response pushbuttons
Ingress Protection:	IP65
Linearity error:	±2,5 % of measured value at 25°C
Temperature influence:	±0,2 % m.v. / 10 K
Compensation range:	-10 °C... +70 °C
Repeatability:	±0,1 % m.v.

A/D converter:	
Scanning rate	500 ms
Electrical connection:	Plug M12x1 (4- / 5-pin)
Power supply:	15...32 V DC (reversed polarity protected)
Power consumption:	approx. 50 mA (without load)
Analog output:	
Current output	4...20 mA
Load	max. Rl = (Ub -12 V) / 20 mA Rl = 600 Ω bei Ub 24 V DC
Load influence	0,3 % / 100 Ω
Scanning rate	500 ms
Resolution	10 Bit (1024 steps per measuring span)
Option:	
Voltage output	0...10 V
Rating	max. 10 mA, short-circuit proof
Adjustment range	25 %...100 % m.v.
Transistor switching outputs:	
Switching function	Normally open / normally closed standard / window mode and diagnosis function adjustable
Adjustment range	0 %...125 % m.v.
Switching frequenzy	max. 100 Hz max. 500 mA, short-circuit proof
Delay	0,0...9,9 s adjustable
Display	LED green
Puls output:	On request

UDMS 4 0005 04-10 E M

meister strömungstechnik gmbh
Im Gewerbegebiet 2
63831 Wiesen
Germany
Tel.: +49 (0) 6096 / 97 20 - 0
Fax: +49 (0) 6096 / 97 20 - 30
E-Mail: Info@meister-flow.com
Internet: www.meister-flow.com

SF, SFD, SFM

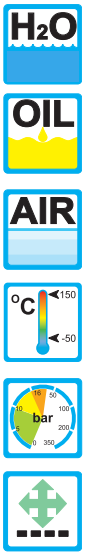

strainer
- for high temperatures
- high pressure resistance
- easy cleaning

SF, SFD, SFM

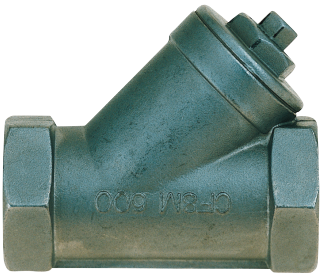

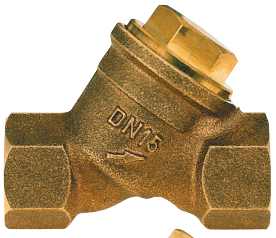

Operation

Inside the strainer a screen basket is fitted to retain solids.
Additionally the type SFM is equipped with magnets to withhold ferromagnetic particles.

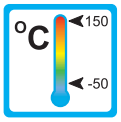

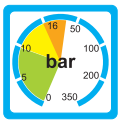

Application

Retaining of particles contained in liquids or gases.

Features

Characteristics of this sturdy type are:

– high temperature resistance

– high pressure resistance

– Magnet separator (SFM only)

– Easy maintenance

– Threaded connection
Special threads on request

Installation hints

The installation of the strainer can be done in any way in the system. The flow direction must be observed.

The strainer must not be used as a supporting part in a pipe-construction.

SF SFD SFM 1 0002 05-06 E M

Technical Data

SF, SFD, SFM

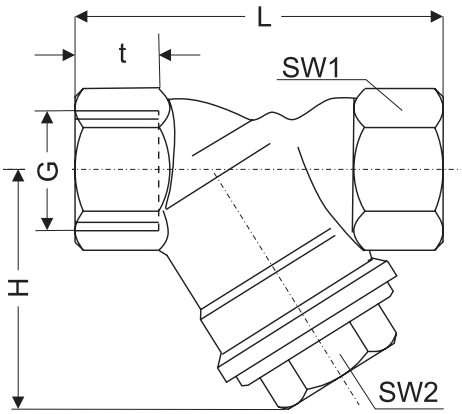

		Material				Material				Material		
G	Type	RG	MS	VA	Type	RG	MS	VA	Type	RG	MS	VA
1/4”	SF-8	×			SFD-8	×						
3/8”	SF-10	×			SFD-10	×						
1/2”	SF-15	×		×	SFD-15	×		×	SFM-15	×		×
3/4”	SF-20	×		×	SFD-20	×		×	SFM-20	×		×
1”	SF-25	×		×	SFD-25	×		×	SFM-25	×		×
1 1/4”	SF-32	×		×	SFD-32	×		×	SFM-32	×		
1 1/2”	SF-40	×		×	SFD-40	×		×	SFM-40	×		
2”	SF-50	×		×	SFD-50	×		×	SFM-50	×		
2 1/2”	SF-65		×		SFD-65		×					
3”	SF-80		×		SFD-80		×					
	Strainerbasket: 0,6 mm mash size stainless steel				Strainerbasket: 0,25 mm mash size stainless steel				Strainerbasket: 0,6 mm mash size stainless steel Magnets: hardferrite			
	RG: red brass				MS: brass				VA: stainless steel			

	Overall dimensions [mm]						PN		
Type	G	L	t	H	SW1	SW2	RG	MS	VA
SF-8	1/4”	56	11	35	21	17	16	-	-
SF-10	3/8”	56	11	35	21	17	16	-	-
SF-15	1/2”	66	13	42	27	22	16	-	40
SF-20	3/4”	77	14	50	31	27	16	-	40
SF-25	1”	90	15	62	38	32	16	-	40
SF-32	1 1/4”	112	18	78	47	41	16	-	40
SF-40	1 1/2”	120	18	82	54	46	16	-	40
SF-50	2”	150	22	95	66	56	16	-	40
SF-65	2 1/2”	220	23	125	85	70	-		-
SF-80	3	243	26	140	100	75	-		-

	Overall dimensions [mm]						PN		
Type	G	L	t	H	SW1	SW2	RG	MS	VA
SFD-8	1/4”	56	11	35	21	17	16	-	-
SFD-10	3/8”	56	11	35	21	17	16	-	-
SFD-15	1/2”	59	12	40	29	19	16	-	40
SFD-20	3/4”	77	14	50	31	27	16	-	40
SFD-25	1”	90	15	62	38	32	16	-	40
SFD-32	1 1/4”	112	18	78	47	41	16	-	40
SFD-40	1 1/2”	120	18	82	54	46	16	-	40
SFD-50	2”	150	22	95	66	56	16	-	40
SFD-65	2 1/2”	220	23	125	85	70	-	16	-
SFD-80	3	243	26	140	100	75	-	16	-

	Overall dimensions [mm]						PN		
Type	G	L	t	H	SW1	SW2	RG	MS	VA
SFM-15	1/2”	66	13	42	27	22	16	-	16
SFM-20	3/4”	77	14	50	31	27	16	-	16
SFM-25	1”	90	15	62	38	32	16	-	16
SFM-32	1 1/4”	112	18	78	47	41	16	-	-
SFM-40	1 1/2”	120	18	82	54	46	16	-	-
SFM-50	2”	150	22	95	66	56	16	-	-

SF SFD SFM 2 0002 05-06 E M

meister strömungstechnik gmbh
Im Gewerbegebiet 2
DE - 63831 Wiesen
Tel.: +49 (0) 6096 / 97 20 - 0
Fax: +49 (0) 6096 / 97 20 - 30
E-Mail: Info@meister-flow.com
Internet: www.meister-flow.com

BA, BB, BC

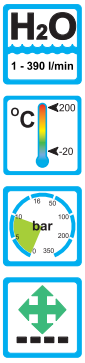

flow limiter
- high reliability
- threaded connection

BA, BB, BC

Operation:

The flow limiters work on a pure mechanical base and do not require any external power source.
The cross sectional area, available to the flowing medium, will change with pressure changes in that way, that an almost constant flow stream can be maintained.

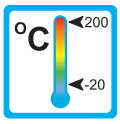

Application

The flow limiters model BA, BB and BC are used to maintain a constant or restrict a flow stream of liquids.
The flow limiters are employed, besides other applications, in the following areas:

– Water treatment

– Irrigation

– Sanitary installations

Features

The flow limiters work in the control pressure range of 2 to 10 bar.

Further features of these sturdy units are:

– any mounting position

– high functional reliability

– suitable for hotwater

– Thread connections

Installation hints

The installation of the limiters can be done in any way in the system. The flow direction must be observed.

The limiters must not be used as supporting part in a pipe structure.

The liquid must not contain any solid particles!
We recommend the installation of strainers, model SFD or SFM.

Begrenzer 1 0003 04-08 E M

Technical data

BA

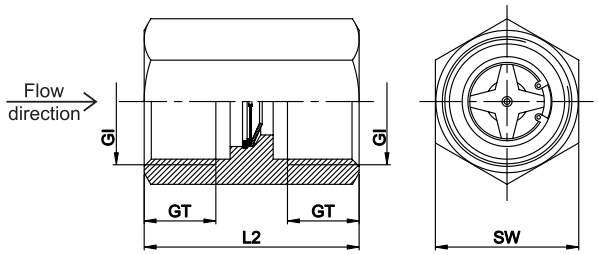

Type	Gl1	Gl2	GT [mm]	SW [mm]	L2 [mm]	Weight [g]
BA	G 1/2"	G 1/2"	14	27	43	72
BA	G 3/4"	G 3/4"	15	30	45	125

Ranges: 1 - 30 l/min in 1 l/min - steps

BB

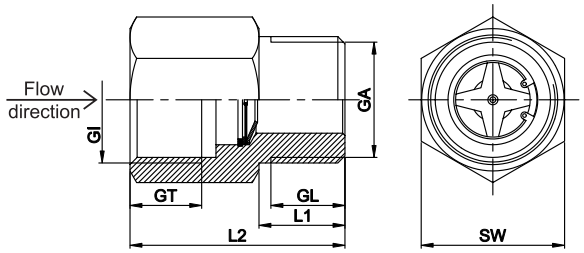

Type	Gl/GA	GT [mm]	GL [mm]	SW [mm]	L1/L2 [mm]	Weight [g]
BB	G 1/2"	14	14	24	16/43	71
BB	G 3/4"	15	15,5	30	18/45	135

Range: 1 - 30 l/min in 1 l/min - steps

BC

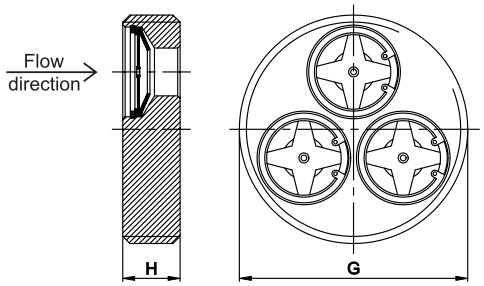

Type	G	H [mm]	Q_{min}* [l/min]	Q_{max}* [l/min]	Weight [g]
BC	G 3/4"	12	1	30	25
BC	G 1 1/2"	12	3	90	104
BC	G 2"	15	5	150	190
BC	G 2 1/2"	15	9	270	290
BC	G 3"	15	13	390	375

* from Q_{min} to Q_{max} in 1l/min - steps

Operating data	BA		BB		BC	
min. control pressure	2 bar					
max. control pressure	10 bar					
Accuracy:	up to 2 l/min: ± 15% of nominal value, from 3 l/min: ± 10% of nominal value					
Temperature max.:	200 °C					
Material:	brass	stainless steel	brass	stainless steel	brass	stainless steel
Body:	brass	1.4305	brass	1.4305	brass	1.4571
Star:	1.4310		1.4310		1.4310	
Cone:	1.4301		1.4301		1.4301	
Rivet:	1.4301		1.4301		1.4301	
Retainerring:	1.4121		1.4121		1.4121	

Begrenzer 2 0007 04-10 E M

meister strömungstechnik gmbh
Im Gewerbegebiet 2
63831 Wiesen
Germany
Tel.: +49 (0) 6096 / 97 20 - 0
Fax: +49 (0) 6096 / 97 20 - 30
E-Mail: Info@meister-flow.com
Internet: www.meister-flow.com

SIGNAL

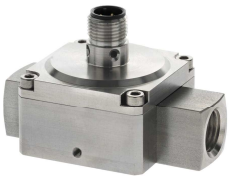

analog transmitter
- analog output

13

MONITOR

analog transmitter
- analog output
- 1 switch point

13

DISPLAY

analog transmitter
- analog output
- 2 switch points
- display

13

KSR

contact protection relay

13

MC-01, MT-02, CI-420, DFD-2

- compatible with COVOL
- monitoring / totalizing / dosing
- potential-free relay output

13

Analog transmitter

SIGNAL

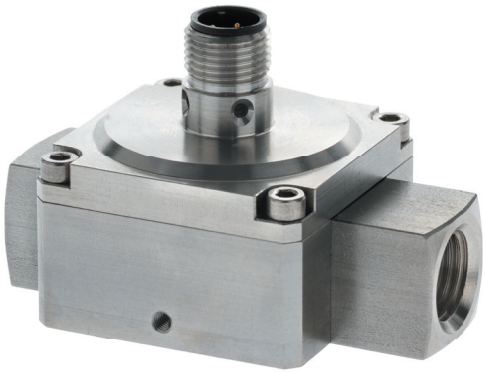

Range of Applications

Operation

- The position of a magnetic float / piston is detected by means of analog Hall-Sensors. The electronics provides an analog signal.

Application

- Use in combination with flow sensors (with float / piston) for different flow media (see table on the right side).

Features

- Analog Output (4-20 mA or 0-10 V)

Installation hints

- The operating instruction for the analog transmitter SIGNAL must be observed!
- Download: www.meister-flow.com

Possible Applications / Combinations

Medium	Sensor	Electronics	Combination
H_2O	DUM	+ SIGNAL	= DUM/SIGNAL
	DWM	+ SIGNAL	= DWM/SIGNAL
	RVM/U-1	+ SIGNAL	= RVM/U-1/SIGNAL
	RVM/U-2	+ SIGNAL	= RVM/U-2/SIGNAL
	RVM/U-4	+ SIGNAL	= RVM/U-4/SIGNAL
OIL	DKM-1	+ SIGNAL	= DKM-1/SIGNAL
	DKM-2	+ SIGNAL	= DKM-2/SIGNAL
	DKME	+ SIGNAL	= DKME/SIGNAL
AIR	DWM-L	+ SIGNAL	= DWM-L/SIGNAL
	RVM/U-L-1	+ SIGNAL	= RVM/U-L-1/SIGNAL
	RVM/U-L-2	+ SIGNAL	= RVM/U-L-2/SIGNAL
	RVM/U-L-4	+ SIGNAL	= RVM/U-L-4/SIGNAL

SIGNAL 1 0002 04-10 E M

Mechanical drawing and connection diagram

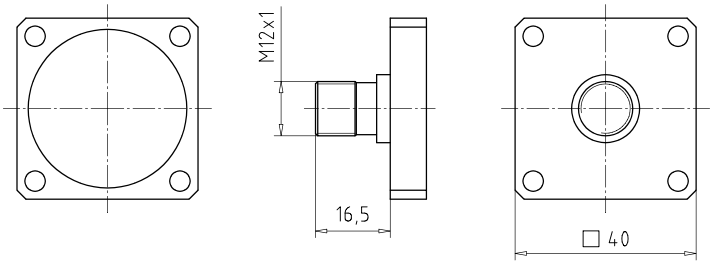

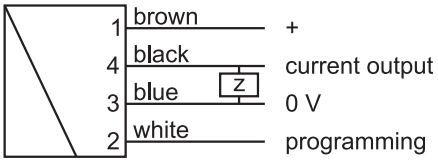

Technical data

Analog output	4...20 mA or 0...10 V (Please specify when ordering!)
Operating Voltage	24 V (18...30 V)
Power consumption	< 1 W
Connection	For round plug M 12 x 1, 4pol.
Ingress protection	IP 67
Accuracy	± 3 % f.s.d. (in combination with the flow sensor)
Repeatability	±1 % f.s.d.
Operating temperature	- 20 °C ... + 70 °C
Storage temperature	-20 °C ... +80 °C
Material	Body Brass nickel-plated
Notes	Please note that the SIGNAL-Electronics is aligned with the flow sensor and must not be replaced! For more information, please refer to the operating instruction for the analog transmitter SIGNAL. Please note also the data sheet and the operating instruction of the flow sensor!

SIGNAL 2 0002 04-10 D M

meister strömungstechnik gmbh
Im Gewerbegebiet 2
63831 Wiesen
Germany
Tel.: +49 (0) 6096 / 97 20 - 0
Fax: +49 (0) 6096 / 97 20 - 30
E-Mail: vertrieb@meister-flow.com
Internet: www.meister-flow.com

Analog transmitter

MONITOR

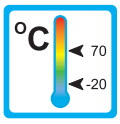

Range of Applications

Operation

- The position of a magnetic float / piston is detected by means of analog Hall-Sensors. The electronics provides an analog signal.

Application

- Use in combination with flow sensors (with float / piston) for different flow media (see table on the right side).

Features

- Analog output (4-20 mA or 0-10 V)
- 1 Switch point (magnetically programmable)
- Status-LED
- Stainless steel body

Installation hints

- The operating instruction for the analog transmitter MONITOR must be observed!
- Download: www.meister-flow.com

Possible Applications / Combinations

Medium	Sensor	Electronics	Combination
H_2O	DUM	+ MONITOR	= DUM/MONITOR
	DWM	+ MONITOR	= DWM/MONITOR
	RVM/U-1	+ MONITOR	= RVM/U-1/MONITOR
	RVM/U-2	+ MONITOR	= RVM/U-2/MONITOR
	RVM/U-4	+ MONITOR	= RVM/U-4/MONITOR
OIL	DKM-1	+ MONITOR	= DKM-1/MONITOR
	DKM-2	+ MONITOR	= DKM-2/MONITOR
	DKME	+ MONITOR	= DKME/MONITOR
AIR	DWM-L	+ MONITOR	= DWM-L/MONITOR
	RVM/U-L-1	+ MONITOR	= RVM/U-L-1/MONITOR
	RVM/U-L-2	+ MONITOR	= RVM/U-L-2/MONITOR
	RVM/U-L-4	+ MONITOR	= RVM/U-L-4/MONITOR

MONITOR 1 0002 04-10 E M

Technical data

Mechanical drawing and connection diagram

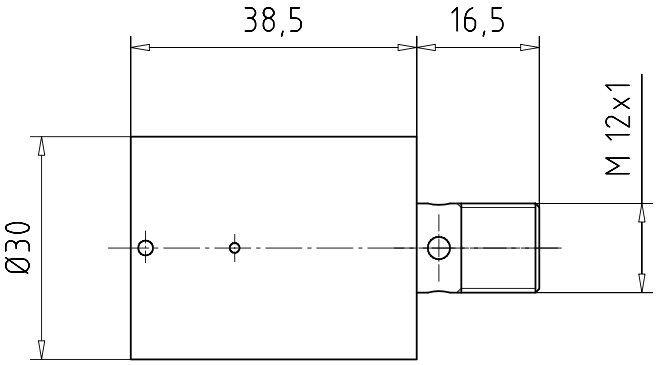

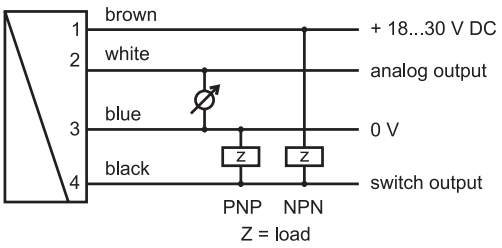

Technical data

Analog output	4...20 mA or 0...10 V (Please specify when ordering!)
Switching output	1 short-circuit proof and reverse-polarity protected switching output Push-Pull-Output The output is self-configuring and can be connected as PNP- or NPN-switch. The switch contact is available as Min- or Max-contact (Please specify when ordering!)
Load	max. 100 mA
Hysteresis (electronic)	2 % F.S. The position of the hysteresis depends on the programming of the contact. Contact programmed as Min-switch: above / contact programmed as Max-switch: below
Hysteresis (mechanical)	Depending on the sensor
LED	Switchting status LED (yellow) in the connector outlet LED on: switching output OK LED off: alarm LED flashes: teaching / programming of the switch point
Switch point programming	”Teach-in” of the switch point with a calibration magnet (see operating instruction)
Operating Voltage	24 V (18...30 V)
Power consumption	< 1 W
Connection	For round plug M 12 x 1, 4pol.
Ingress protection	IP 67
Accuracy	± 3 % f.s.d. (in combination with the flow sensor)
Repeatability	±1 % f.s.d.
Operating temperature	- 20 °C ... + 70 °C
Storage temperature	-20 °C ... +80 °C
Material	Body Stainless steel 1.4305
Notes	The sensor is configured to your specifications. It is thus ready for immediate use without programming! Please note that the MONITOR-Electronics is aligned with the flow sensor and must not be replaced! For more information, please refer to the operating instruction for the analog transmitter MONITOR. Please note also the data sheet and the operating instruction of the flow sensor!

MONITOR 2 0002 04-10 E M

meister strömungstechnik gmbh
Im Gewerbegebiet 2
63831 Wiesen
Germany
Tel.: +49 (0) 6096 / 97 20 - 0
Fax: +49 (0) 6096 / 97 20 - 30
E-Mail: vertrieb@meister-flow.com
Internet: www.meister-flow.com

DISPLAY

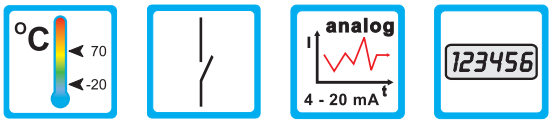

Range of Applications

Operation

- The position of a magnetic float / piston is detected by means of analog Hall-Sensors. The electronics provides an analog signal.

Application

- Use in combination with flow sensors (with float / piston) for different flow media (see table on the right side).

Features

- Backlit graphical Display (LCD)
- Analog output (4-20 mA)
- 2 Switching points
- Programmable hysteresis
- Bright Signal-LED
- Simple programming
- Stainless steel case
- Display cover made of hardened mineral glass

Installation hints

- The operating instruction for the analog transmitter DISPLAY must be observed!
- Download: www.meister-flow.com

Possible Applications / Combinations

Medium	Sensor	Electronics	Combination
H_2O	DUM	+ DISPLAY	= DUM/DISPLAY
	DWM	+ DISPLAY	= DWM/DISPLAY
	RVM/U-1	+ DISPLAY	= RVM/U-1/DISPLAY
	RVM/U-2	+ DISPLAY	= RVM/U-2/DISPLAY
	RVM/U-4	+ DISPLAY	= RVM/U-4/DISPLAY
OIL	DKM-1	+ DISPLAY	= DKM-1/DISPLAY
	DKM-2	+ DISPLAY	= DKM-2/DISPLAY
	DKME	+ DISPLAY	= DKME/DISPLAY
AIR	DWM-L	+ DISPLAY	= DWM-L/DISPLAY
	RVM/U-L-1	+ DISPLAY	= RVM/U-L-1/DISPLAY
	RVM/U-L-2	+ DISPLAY	= RVM/U-L-2/DISPLAY
	RVM/U-L-4	+ DISPLAY	= RVM/U-L-4/DISPLAY

DISPLAY 1 0001 03-10 E M

Mechanical drawing

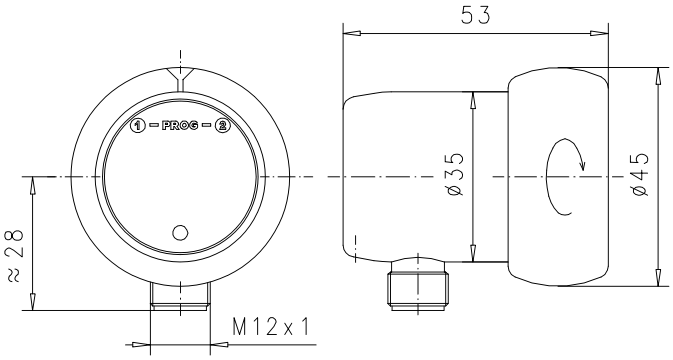

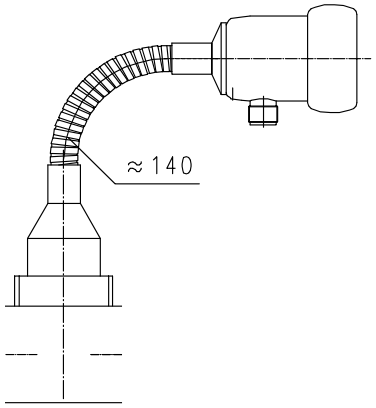

Gooseneck-Version

Connection diagram

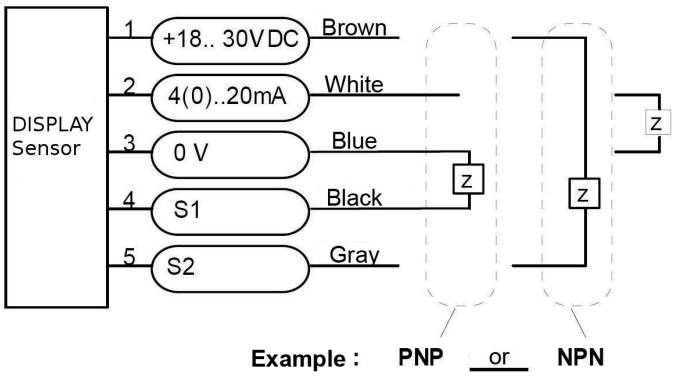

Example :

Z = Load

DISPLAY 2 0002 04-10 E M

Technical data

Display	
	Backlit transreflective LCD (32 x 16 Pixels) (Good readability in the dark and in direct sunlight)
	Indication of value and dimension (unit selectable)
	Extended temperature range (-20...70 °C)
	Turnable reading position (mechanical block limits the total range (< 360°))
LED	
	Signal-LED (red) signals a message on the display, e.g. an switch alarm (when the flow rate falls below or exceeds a limit value) or an error message
Analog output	
Current output (standard)	4(0)...20 mA (programmable)
Voltage output (Please specify when ordering!)	2(0)...10 V
	The programmable span allows the optimum adaptation to the respective application.
Switching output	
Number	2 short-circuit proof and reverse-polarity protected switching outputs
Type	Push-pull-outputs The outputs are self-configuring and can be connected as PNP or NPN switch. The switch contacts can be programmed as Min- or Max-contacts.
Load	Load in total max. 300 mA
Hysteresis	Selectable (adjustable) in magnitude and direction
Programming	
	Programming by means of a programming ring (see operating instruction) Programmable features e.g.: hysteresis, span
	Programming protection by turning through 180° or by removing the programming ring

DISPLAY 3 0001 03-10 E M

Technical Data

Operating Voltage	24 V (18...30 V)
Power consumption	< 1 W
Connection	For round plug M 12 x 1, 5pol.
Ingress protection	IP 67
Accuracy	± 3 % F.S. (in combination with the flow sensor)
Repeatability	±1 % F.S.
Operating temperature	- 20 °C - + 70 °C with goose-neck (see mechanical drawing on page 2) max. 120 °C
Storage temperature	-20 °C - 80 °C

Material

Body	Stainless steel 1.4305
Glass	Hardened mineral crystal
Magnet	Cobalt Samarium
Ring	POM

Notes

The sensor is configured to your specifications. It is thus ready for immediate use without programming!

Please note that the DISPLAY-Electronics is aligned with the flow sensor and must not be replaced!

For more information, please refer to the operating instruction for the analog transmitter DISYPLAY. Please note also the data sheet and the operating instruction of the flow sensor!

DISPLAY 4 0001 03-10 E M

meister strömungstechnik gmbh
Im Gewerbegebiet 2
63831 Wiesen
Germany
Tel.: +49 (0) 6096 / 97 20 - 0
Fax: +49 (0) 6096 / 97 20 - 30
E-Mail: vertrieb@meister-flow.com
Internet: www.meister-flow.com

Contact Protection Relay

KSR

Application

Working principle

- Contact protection relay type KSR can switch higher power than reed-contacts and there serve as overloaded protection for the flow monitor contacts.

Application: switching of:

- Inductive loads (voltage peaks with ON or OFF switching)
- Capacities (current peaks with ON switching)
- Resistance loads, specially bulbs (current peaks with ON switching due to cold filament).

Features

- Potentialfree change over contact
- 230 V AC / 5 A
- 11 pin plug socket for rail to DIN 4677

Installation hint

- The operating instruction for KSR must be obsertved!
- Download: www.meister-flow.com

Technical drawing

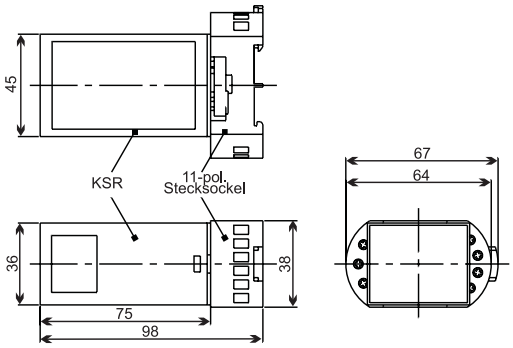

Contact diagram

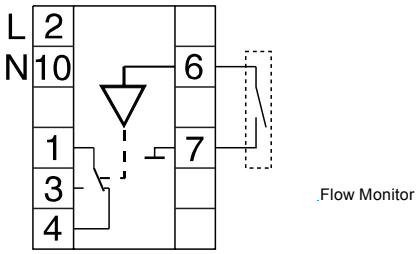

KSR 1 0002 10-08 E M

Technical data

Technical Data

Operating temperature:	-10 °C to +70 °C
Supply voltage:	230 V AC 50-60 Hz (24 V and 115 V on request)
Protection instalation:	4,0 kV
Sensitivity:	100 kΩ
Output:	
Type:	potential free change over
Relay:	aktiv with open reed-contact
Switchrating:	230 V AC / 5A
Switch delay (on / off)	2 s / 2 s
Contactmaterial:	Ag (silver)

Technical Data

Max. cable length:	
Between Flow monitor & KSR	40 m
Mounting:	11-pin plug socket for DIN - rail 4677 (EN 50022)
Dimensions:	
w/o plus socket (H x B x T)	45 x 36 x 75 mm
with plus socket (T)	98 mm

KSR 2 0002 10-08 E M

meister strömungstechnik gmbh
Im Gewerbegebiet 2
63831 Wiesen
Germany
Tel.: +49 (0) 6096 / 97 20 - 0
Fax: +49 (0) 6096 / 97 20 - 30
E-Mail: vertrieb@meister-flow.com
Internet: www.meister-flow.com

Digital displays

MC-01
MT-02

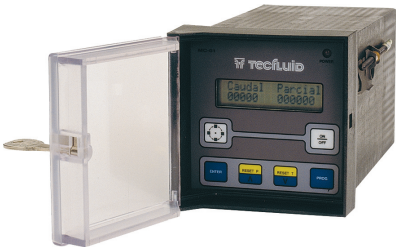

Operation

The MC-01 and MT-02 digital displays are measuring transducers, which are used in conjunction with the COVOL positive displacement meter.

Application

The MC-01 and MT-02 digital displays are used together with the positive displacement meter COVOL for flow monitoring, volume-counting and batching.

Features

The series proves itself through reliable function and easy handling. Further characteristics of these types are:

– Suitable for control panels

– Battery back up system

– Wide temperature range

Installation hints

The operating instruction for MC-01 / MT-02 must be observed under any circumstances!

MC_MT 1 0002 05-06 E M

Technical data

Digital display MC-01

The MC-01 digital display is used in conjunction with the positive displacement meter COVOL, for example for flow monitoring and volume counting.
With the included preset counter batching is possible.
For this function a potential free relay output is provided.

Technical data	
Power supply	110, 220-240 , 24 V AC at 50-60 Hz, 12 (not with analog output), 24 V DC
Power consumption	< 3 VA
Signal input COVOL	reed contact, 0...100 Hz
Analog input (60 Ω input resistor)	0-20, 4-20 mA, 0-5, 0-10, 1-5, 2-10 V DC
Relay output (for preset counter)	1 A, 250 V AC, 60 VA
Accuracy	0,01 % (0,4 % at analog input signal)
Temperature range	-10 °C...+60 °C
Optional: analog output with 12 bit resolution (Not with analog input signal!)	0-20, 4-20 mA 0-5, 0-10, 1-5, 2-10 V DC
Display	2 lines, alphanumeric Display with 16 digits according to DIN 43700 (optional backlighted)
Housing dimensions	96 x 96 x 190 mm (w x d x l), for panel mounting, cut-out 90 x 90 mm
Counter	7 digits
Standard	Battery back up system, adaptive filter for stable display, flow display in in l / h or m^3 / h
Optional	remote push button for batching, IP-65 front protection

Digital display MT-02

The MT-02 digital display is used in conjuction with the positive displacement meter COVOL for example for flow monitoring (no flow indication) and volume counting.
With the included preset counter batching is possible.
For this function a potential free relay output is provided.

Technical data	
Power supply	110, 220, 240 , 24 V AC at 50-60 Hz, 12, 24 V DC
Power consumption	< 1 VA
Signal input COVOL	reed contact, 0...100 Hz
Signal input TTL	5 V, 0...10000 Hz
Relay output (for preset counter)	1 A, 250 V AC, 200 VA
Accuracy	no lost pulses
Temperature range	-10 °C...+60 °C
Liter / pulse	0,00001...99,99999 (Standard) 0,0000001...0,9999999
Display	7 digits LED - display
Housing dimensions	96 x 96 x 190 mm (w x d x l), for panel mounting, cut-out 90 x 90 mm
Counter	7 digits
Standard	Battery back up system, remote push button for batching
Optional	Second relay, interface for 5 V or 10 V proximity sensor

MC_MT 2 0002 05-06 E M

meister strömungstechnik gmbh
Im Gewerbegebiet 2
DE - 63831 Wiesen
Tel.: +49 (0) 6096 / 97 20 - 0
Fax: +49 (0) 6096 / 97 20 - 30
E-Mail: Info@meister-flow.com
Internet: www.meister-flow.com

Measuring converter

CI-420
DFD-2

Operation

The measuring converters CI-420 and DFD-2 are converting a frequency signal into an analog signal or into a standard count pulse.

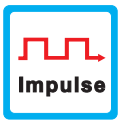

Application

The CI-420 and DFD-2 measuring converters work together with the positive displacement meter COVOL for flow measurement or volume counting of liquids.

Features

The series proves itself through reliable function and easy handling.
Further characteristics of these types are:

– Easy mounting (on mounting rails according to DIN 47667 / EN 50.022/50.035)

– High temperature range

Installation hints

The operating instruction for CI-420 and DFD-2 must be observed under any circumstances!

CI_DFD 1 0003 05-06 E M

Technical data

Frequency / analog converter CI-420

The measuring converter CI-420 transforms the frequency signal of the positive displacement meter COVOL into a 0 to 20 or a 4 to 20 mA signal. The adjustment will be made by jumpers and decade-switches

Technical data	
Power supply	110, 220-240, 24 V AC at 50-60 Hz, 12, 24 V DC
Power consumption	< 1 VA
Signal input COVOL	reed contact, 0...100 Hz
Switch off frequency	0,04 Hz
Accuracy	0,2 % of full scale
Temperature range	-10 °C...+60 °C
Analog output with 12 bit or 16 bit resolution	0-20, 4-20 mA 0-5, 0-10, 1-5, 2-10 V DC
Mounting	on mountig rail according to DIN 46277 / EN 50.022 / 50.035
Standard	adaptive filter for stable output signal

Frequency converter DFD-2

The DFD-2 converts the frequency signal from the positive displacement meter COVOL into a standard count pulse. The adjustment will be made by jumpers and decade switches. For example, the COVOL signal output of 8,77 pulses per litre, can be converted from the DFD-2 into one puls per m^3, depending on the settings.

Technical data	
Power supply	110, 220, 240, 24 V AC at 50-60 Hz, 12, 24 V DC
Power consumption	< 1 VA
Signal input COVOL	reed contact, 0...100 Hz
Accuracy	No lost pulses
Temperature range	-10 °C...+60 °C
Input / output range	0,00000001...0,9999
Signal output	TTL (5 V), optoisolated max. 30 V, 50 mA, square wave (50 %)
Pulswidth (output)	0,5 ms, (standard, on request: up to 1 s)
Mounting	on mountig rail according to DIN 46277 / EN 50.022 / 50.035

CI_DFD 2 0003 05-06 E M

meister strömungstechnik gmbh
Im Gewerbegebiet 2
63831 Wiesen
Germany
Tel.: +49 (0) 6096 / 97 20 - 0
Fax: +49 (0) 6096 / 97 20 - 30
E-Mail: Info@meister-flow.com
Internet: www.meister-flow.com

VSB

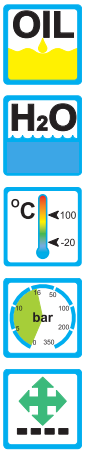

block valve
- incorporated needle valve
- manifold up to 12 units

14

NV

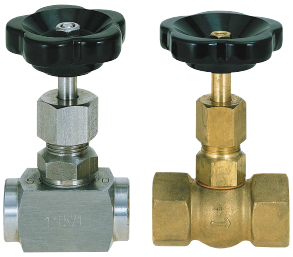

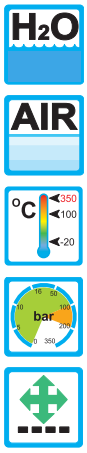

needle valve
- for high temperatures
- high pressure resistance
- threaded connection

14

Overview

Blockvalve

VSB

Operation

The VSB´s can be supplied in single or multiple configuration. The integrated needle valves allow the individual adjustment of the branchlines.

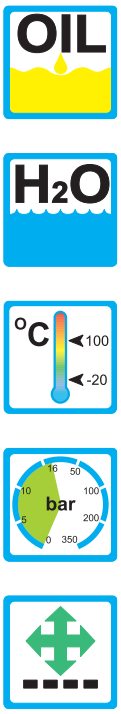

Application

The blockvalves type VSB allow, by means of an integrated needle valve, the individual regulating of the flow rate through the flow monitor / indicator. The VSB´s can be employed in single or multiple configuration (the multiple configuration is factory assembled).

The instruments are employed for example in the following applications:

– Monitoring of central lubrication systems

– Monitoring of lubricating systems with oil circulation.

Characteristics

Properties of this sturdy series are:

– Manifolds up to 12 units

– max. 25 l/min per single unit

– max. 75 l/min per manifold

– Threaded connection, special threads on request

Installation hints:

Principally the data of the mounted instruments (operating instructions and data sheets) must be observed when installing the VSB´s.
The feeding can be made either from the left or right hand side.
The VSB must not be used as a supporting part in a pipe construction.
The medium must not carry any solid parts!
We recommend to install strainers model SFD or SFM.
The operating instruction for VSB must be adhered to.

VSB 1 0001 10-05 E M

Technical Data

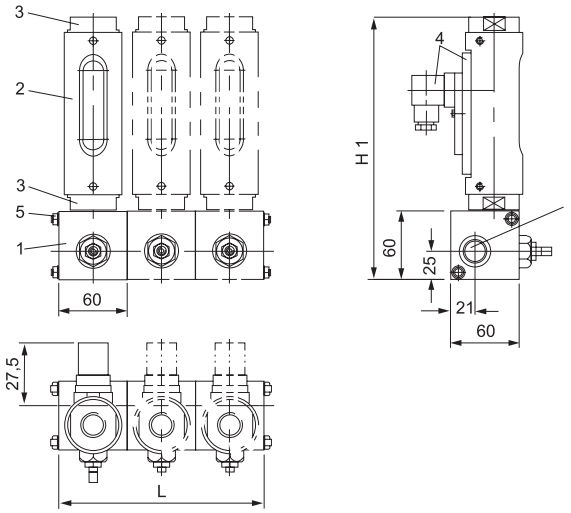

Pos.	Description
1	Valveblock
2	Flow monitor
3	Connection
4	Switch-housing
5	Threaded-rod
	Nut
	Washer

Summary of types VSB

Type	Overall dimensions				Weight	
	G	Thread depth [mm]	L [mm]	H1	Aluminum [g]	Stainl. steel [g]
VSB-1	1/2"	14	60	depending on fitted flow monitor / indicator	560	1510
VSB-2	1/2"	14	120		1180	3080
VSB-3	1/2"	14	180		1770	4620
VSB-4	1/2"	14	240		2360	6160
VSB-5	1/2"	14	300		2950	7700
VSB-6	1/2"	14	360		3540	9240
VSB-7	1/2"	14	420		4130	10780
VSB-8	1/2"	14	480		4720	12320
VSB-9	1/2"	14	540		5310	13860
VSB-10	1/2"	14	600		5900	15400
VSB-11	1/2"	14	660		6490	16940
VSB-12	1/2"	14	720		7080	18480

Operating Data	VSB
Max. operating pressure:	16 bar
Max. operating temperature:	100 °C

Pressure drop:
The diagram on the right shows the maximum flow of oil with different viscosities at a predetermined pressure drop. The measurement has been made with fully opened needle valve.

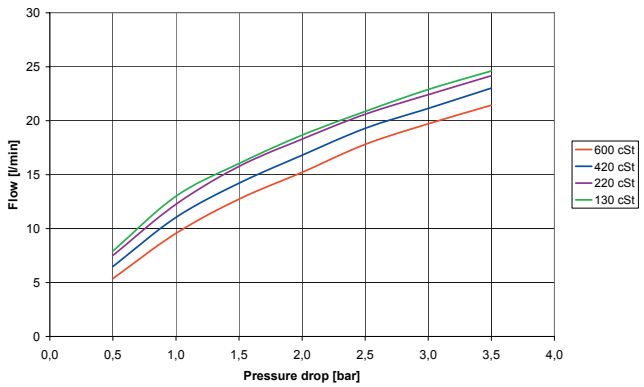

VSB 2 0002 03-07 E M

Material		
	Aluminum-Version	Stainless steel-Version
Body:	Aluminum	1.4571
Stem:	Brass	
Stemlocknut:	1.4305	
Gaskets:	Viton	Viton
Other materials on request		

meister strömungstechnik gmbh
Im Gewerbegebiet 2
DE - 63831 Wiesen
Tel.: +49 (0) 6096 / 97 20 - 0
Fax: +49 (0) 6096 / 97 20 - 30
E-Mail: Info@meister-flow.com
Internet: www.meister-flow.com

Needle Valve

NV

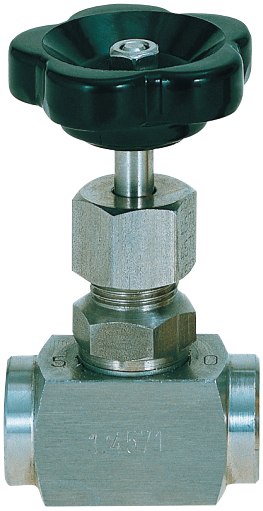

Operation

Seat and plug of the needle valve are conical shaped. By lifting or lowering the plug, the available cross-section can be increased or decreased, that way a fine adjustment of the actual flow is achieved.

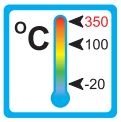

Application

Flow-adjustment of liquids and gases.

Features

Characteristics of this sturdy type are:

– Suitability for high temperature

– high pressure resistance

– Threaded connections special threads on request

Installation hints

The installation of the needle valve can be done in any way in the system. The flow direction must be observed.

The needle valve must not be used as a supporting part in a pipeconstruction!

The medium must not contain any solid particles!
We recommend the installation of strainer type SFD or SFM.

NV 1 0001 07-04 E M

Technical Data

NV Stainless Steel

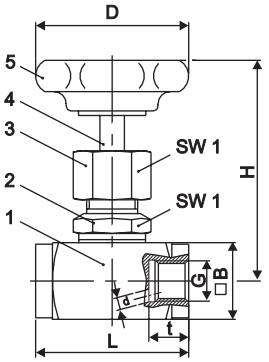

Pos.	Description	Material
1	Body	1.4571
2	Stemguide	1.4571
3	Stuffing-box nut	1.4571
4	Stem	1.4571
5	Handwheel	Plastic
not illustrated	Stem sealing	Te on, optional Graphite

Thread	L	H	D	t	B	SW 1	d	kv-value*
G 1/8”	45	70	50	11	25	22	4	4
G 1/4”	50	72	50	13	25	22	5	8
G 3/8”	55	72	50	13	25	22	6	10
G 1/2”	60	72	63	16	30	22	7	12
G 3/4”	75	95	63	18	35	27	9	18
G 1”	100	110	90	22	45	32	12	32
G 1 1/4”	110	130	100	24	60	41	15	60
G 1 1/2”	130	140	100	28	70	41	22	115
G 2”	130	140	100	28	70	41	22	130

*in l/min, at 1 bar differencial pressure and max. opening

Technical Data					
Connection:	Withworth - pipe thread according to DIN 259, female both sides (other on request)				
Temperature max.:	250 °C (350 °C with graphite stem sealing)				
Nominal Pressure (PN):	200 bar, from 50 °C watch pressure derate				
Pressure derate:	at 50 °C: 6%	at 100 °C: 15 %	at 200 °C: 37%	at 300 °C: 60 %	at 400 °C: 84 %

NV Brass

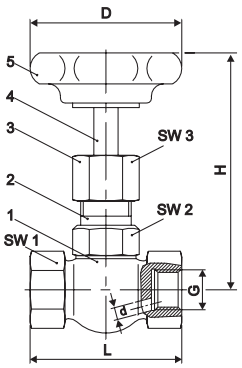

Pos.	Description	Material
1	Body	Cu Zn 39 Pb 3 F 37
2	Stemguide	Ms 58
3	Stuffing-box nut	Ms 58
4	Stem	Ms 58
5	Handwheel	Plastic
not illustrated	Stem sealing	G 1/8” to G 1/2” Perbunan
		G 3/4” to G 2” Te on

Thread	L	H	D	SW 1	SW 2	SW 3	d	kv-value*
G 1/8”	50	70	50	22	19	19	4	4
G 1/4”	50	78	50	22	19	19	5	8
G 3/8”	50	78	50	22	19	19	6	10
G 1/2”	55	78	63	25	19	19	6,5	11
G 3/4”	67	90	63	32	22	22	9	18
G 1”	75	95	63	40	22	22	11	—
G 1 1/4”	110	105	90	54	24	27	13	—
G 1 1/2”	110	110	90	58	24	27	15	—
G 2”	110	110	90	70	27	27	15	—

*in l/min, at 1 bar differencial pressure and max. opening

Technical Data					
Connection:	Withworth - pipe thread DIN 259, female both sides (other on request)				
Temperature max.:	100 °C				
Nominal pressure (PN):	100 bar, from 50 °C watch pressure derate				
Pressure derate:	at 50 °C: 6 %	at 100 °C: 15%			

NV 2 0001 07-04 E M

meister strömungstechnik gmbh
Im Gewerbegebiet 2
DE - 63831 Wiesen
Tel.: +49 (0) 6096 / 97 20 - 0
Fax: +49 (0) 6096 / 97 20 - 30
E-Mail: Info@meister-flow.com
Internet: www.meister-flow.com